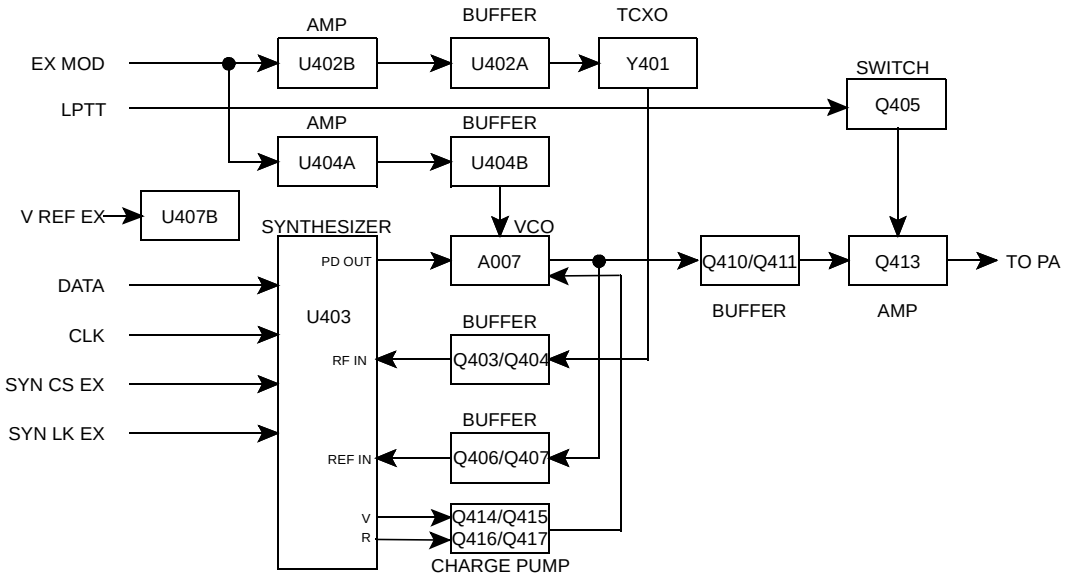

EXCITER BLOCK DIAGRAM

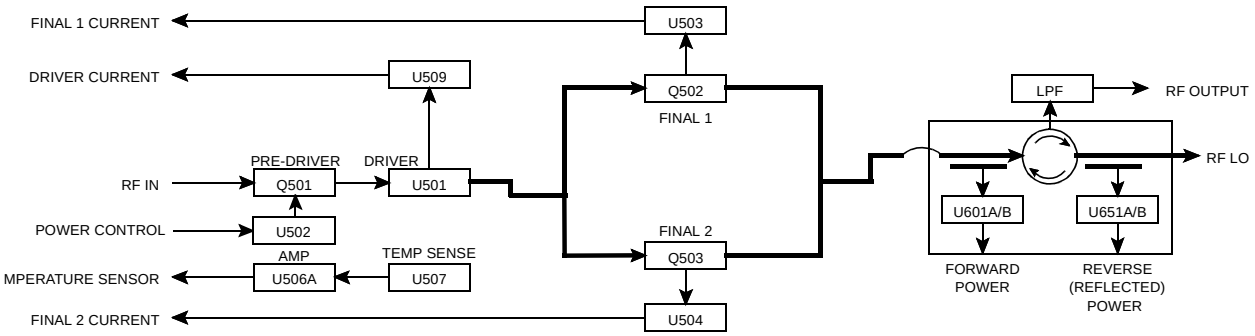

POWER AMPLIFIER BLOCK DIAGRAM