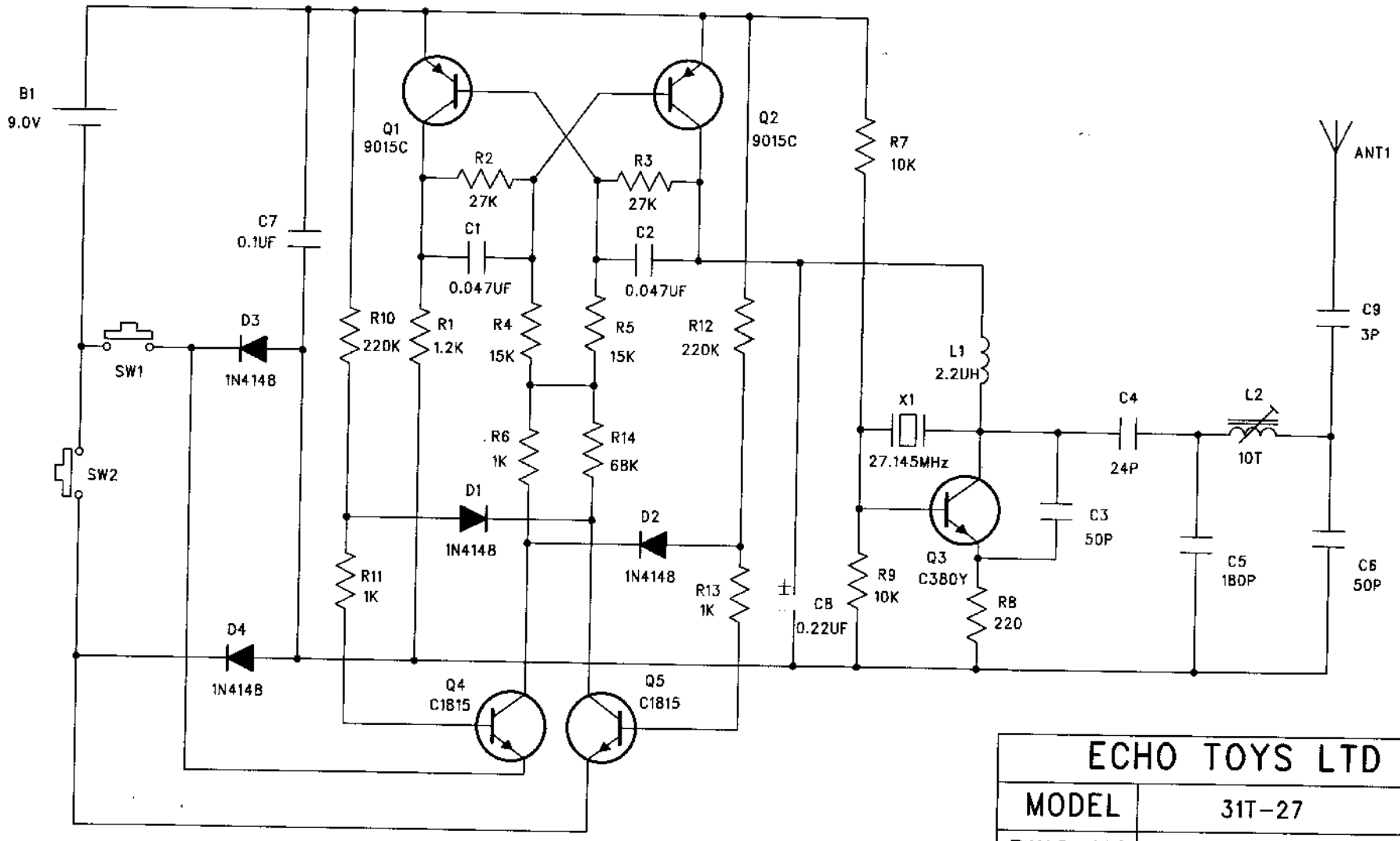

ECHO TOYS LTD	
MODEL	31T-27
DWG NO	
DATE	13 NOV 2001

DESIGNER