Filename: HK69956_DL_Target_Project T_2023 TWS Case_OPT03_B
Date: 22 SEP 2022
(Estimated size for Quotation only)

(Box)
Size: 4.125"W x 1.625"D x 5.5"H
Stock: 300g C1S

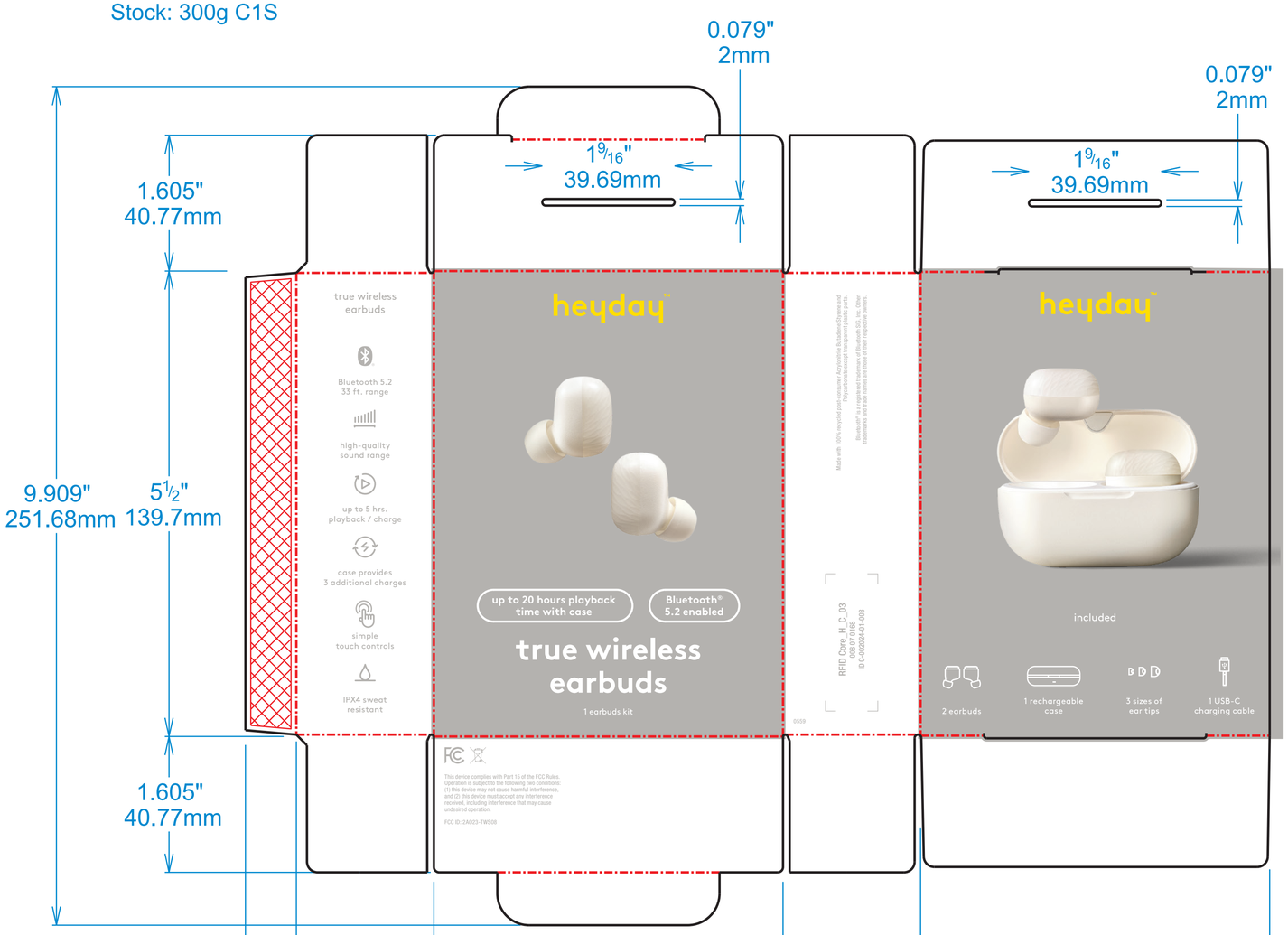

Paper insert Box for cable & Eartips
Stock: 300C1S

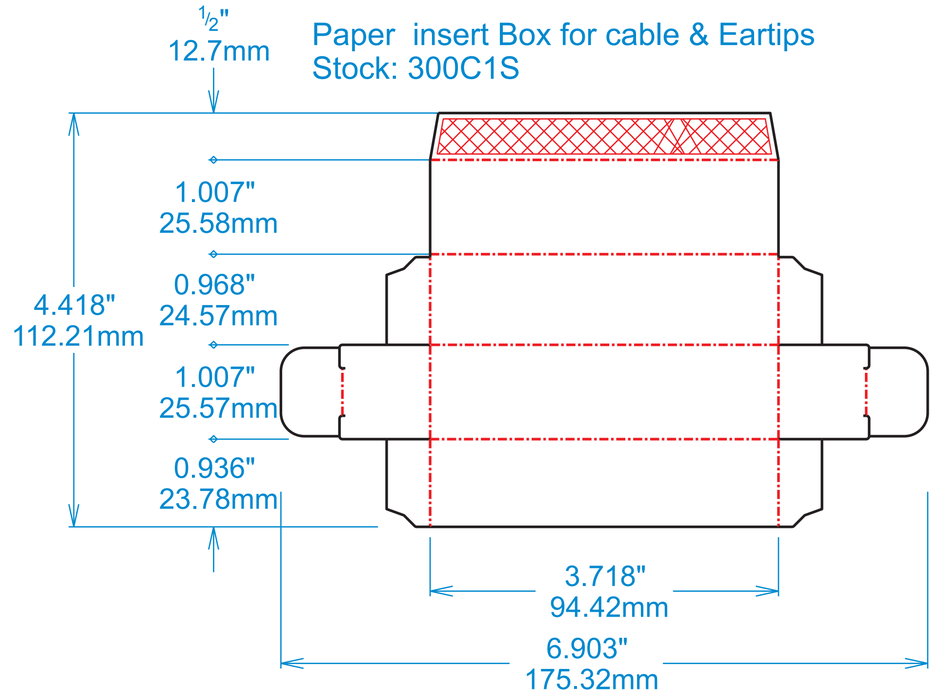

(Round Sticker)
Size: 1" x 1"
Stock: Clear Sticker
Qty.: 2pcs/Set

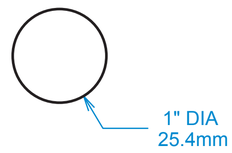

VENDOR: Provide this missing info

Target Creative: 'h' spacer between icons are 90° rotated to adjust all the icons.

Vendor comments include Pre-Production Testing results?
☐ YES ☐ NO

!! ATTENTION PRINTER/VENDOR !!

PID: C-002024-01-003 | **008 07 0168** | **03/19/23** | **D008 HDY C3 AUDIO AND HOME ELECTRONICS**

FLAT SIZE: 12.1008" x 9.9088"
PKG Format: Closed Box **AD:** N/A

SPEC: Sean Larson
CE: Kristin Gregory

CP&D: Katie Lee
PB: Rachael Jones

SEP REFERENCE: Periscope/TGM202200252/NC
DEPT./MERCHANT: D008/Kevin Liu, Ashley Schroeder
PRINTER: Golden Prosperity Printing & Packaging (Heyuan) Co Ltd
VENDOR: Gems

CREATED AT: 100%
SEP: Periscope - Minnesota; For questions about files, proofs, color standards or revised file uploads, please contact: prepress@periscope.com
cyan magenta yellow black Target Wolf Grey Target Canary Yellow matte coating

Apple Macintosh
Application: Adobe Illustrator CC 2022

Keyline	EP: AK	Date: 09/08/22
Final Board	EP: CK	Date: 09/21/22
Final Release	EP: CK	Date: 09/27/22

PRINTED OUT @ 100%

Because of the differences in scanning equipment, Periscope, Inc. cannot guarantee the scannability of UPC Bar codes. The Uniform Code Council recommends a UPC symbol be printed black on white at 100% with no truncation. All UPC codes are test scanned and verified before leaving our facility.

FINAL RELEASE 09/26/22
PKG

XRF XRF

ATTENTION PRINTER!
ELECTRONIC FILES
Printers are responsible for exact color and content match of enclosed proofs and special color samples. As a result, supplied electronic files may need modification to account for trapping, dot gain and press characteristics of specific printing methods and environments. Under no circumstances should fonts, crops, dielines and content be substituted or modified in any way.

包裝產品的顏色和影像部分必需與彩稿之影像，特別色色標吻合，並由印刷業者付全責。為了彌補印刷偏白，網點擴張，以及適應不同的印刷方式和環境，可針對提供之電子檔作必須之調整。在未獲准許之下，字型、圖切線、切割線與內容，不可任意替代與修改。

ATTENTION PRINTER!
NOT REPRESENTATIVE OF ACTUAL PRINTED COLOR. Do not match this proof for spot colors, process tints or 4-color process images. Spot colors must match the ink drawdowns provided in the Target Owned Brands Color Standards binder. Process tints and 4-color process images must match the contract proof.

印刷廠商請注意！
請勿以此為實際印刷的標準，請勿對照此稿件之特別色、網印部分或四色疊印的影像，特別色請比照 Target Owned Brands Color Standards 夾內之顏色卡，網印部分和四色疊印的影像必須比照指定的彩稿。

Fonts used within this file are for output only by the end printer/vendor. Changes to copy may require font licensing and printers/vendors are solely responsible for any licensing costs required.

档案内的字体仅作供应商或印刷厂商输出之用。如因更换文字内容而需要字体的版权使用，供应商或印刷厂商需自行负责所需的任何版权使用的费用。

RFID STICKER INFORMATION

PLEASE DO NOT PRINT RFID STICKER BELOW. RFID STICKER IS FOR SIZE REFERENCE ONLY.
PLEASE ORDER RFID STICKER THROUGH THE DESIGNATED RFID SUPPLIER.

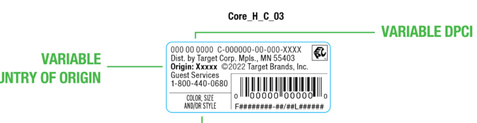

POSITION OF RFID STICKER:
PLACE THE RFID STICKER OVER PRINTED RFID TICK MARKS

Revision	Date
R0-T	03 Oct 2022
R1-T	03 Oct 2022
R2-A	13 Oct 2022