49.82-49.90 MHz

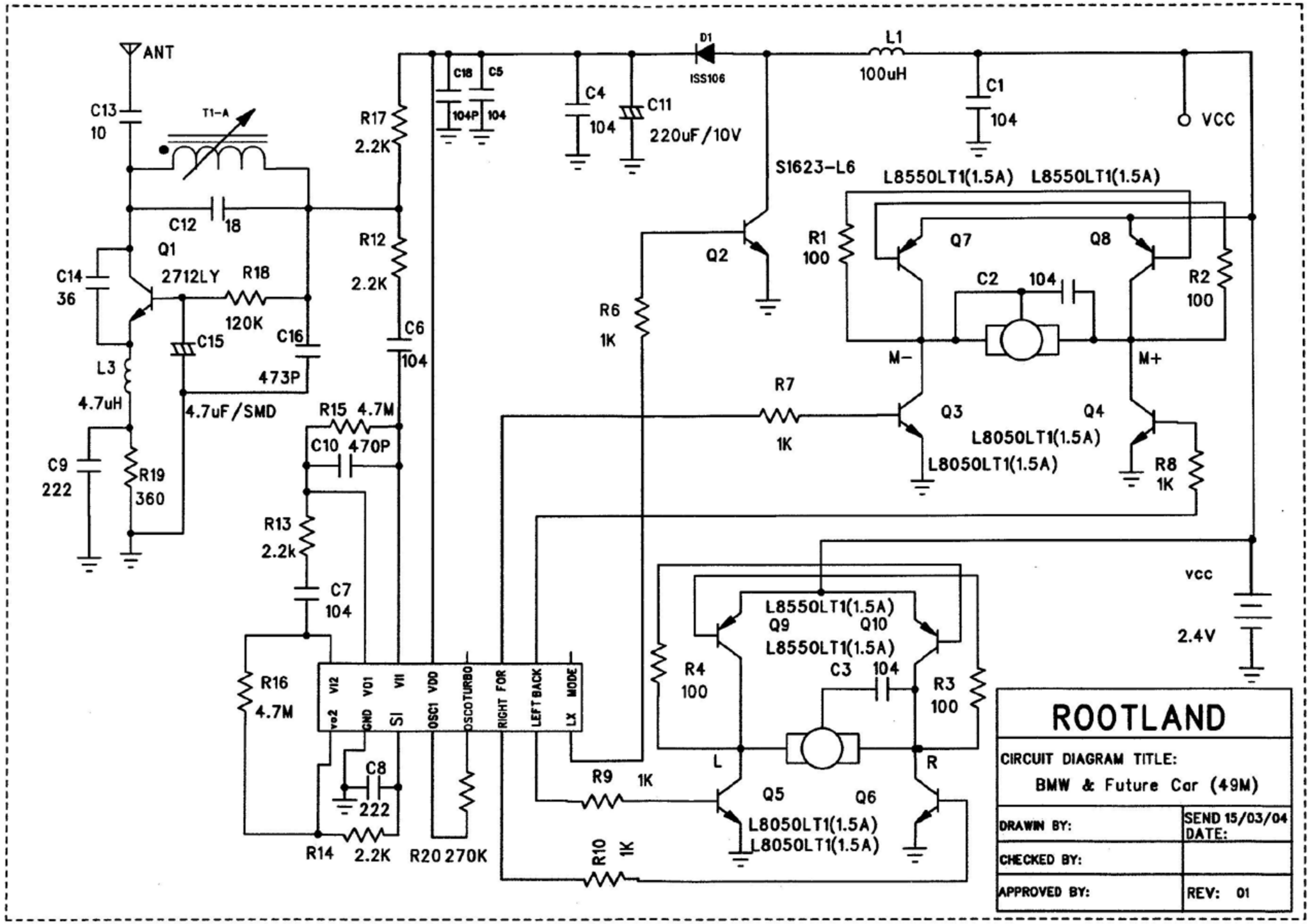

ROOTLAND	
CIRCUIT DIAGRAM TITLE: BMW & Future Car (49M)	
DRAWN BY:	SEND 15/03/04 DATE:
CHECKED BY:	
APPROVED BY:	REV: 01