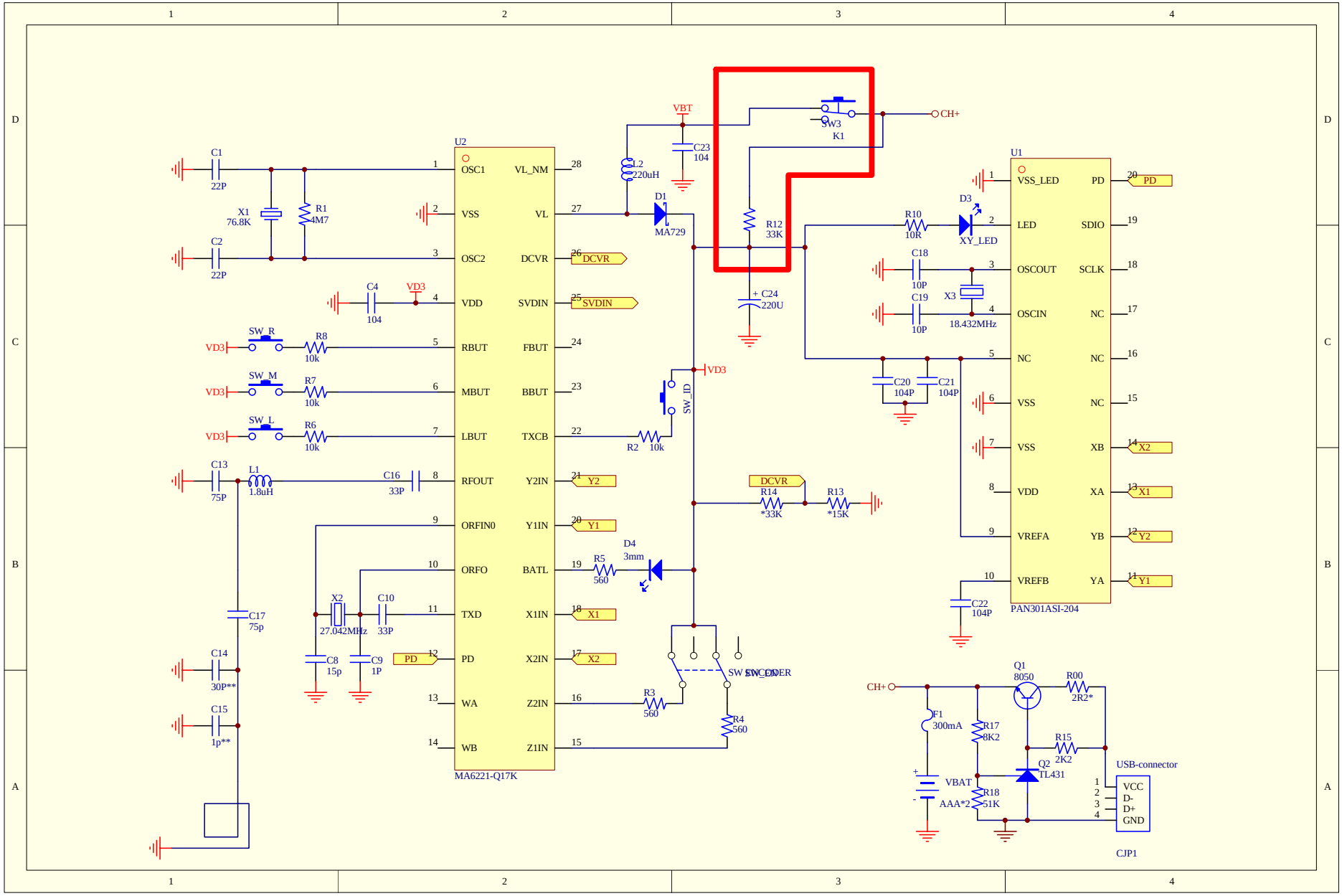
U2
MA6221-Q17K
OSC1
VSS
OSC2
VDD
RBUT
MBUT
LBUT
RFOUT
ORFIN0
ORFO
TXD
PD
WA
WB
VL_NM
VL
DCVR
SVDIN
FBUT
BBUT
TXCB
Y2IN
Y1IN
BATL
X1IN
X2IN
Z2IN
Z1IN
U1
PAN301ASI-204
VSS_LED
LED
OSCOUT
OSCIN
NC
VSS
VDD
VREFA
VREFB
PD
SDIO
SCLK
XB
XA
YB
YA
X2
X1
Y2
Y1
C1
22P
C2
22P
X1
76.8K
R1
4M7
C4
104
VD3
SW_R
R8
10k
SW_M
R7
10k
SW_L
R6
10k
C13
75P
L1
1.8uH
C16
33P
C17
75p
C14
30P**
C15
1p**
X2
27.042MHz
C10
33P
C8
15p
C9
1P
L2
220uH
D1
MA729
VBT
C23
104
R12
33K
C24
220U
SW_ID
R2
10k
R5
560
D4
3mm
R3
560
R4
560
SW_POWER
R14
*33K
R13
*15K
SW3
K1
CH+
R10
10R
D3
XY_LED
C18
10P
C19
10P
X3
18.432MHz
C20
104P
C21
104P
C22
104P
Q1
8050
R00
2R2*
F1
300mA
R17
8K2
R15
2K2
Q2
TL431
VBAT
AAA*2
R18
51K
USB-connector
VCC
D-
D+
GND
CJP1