Internal

CR2477
3V LITHIUM CELL JAPAN
CM 1 2 3 4 5 6 7 8 9 10 11 12 13
Made in China

CR2477
CM 1 2 3 4 5 6 7 8 9 10 11 12
Made in China

CM
Made in China

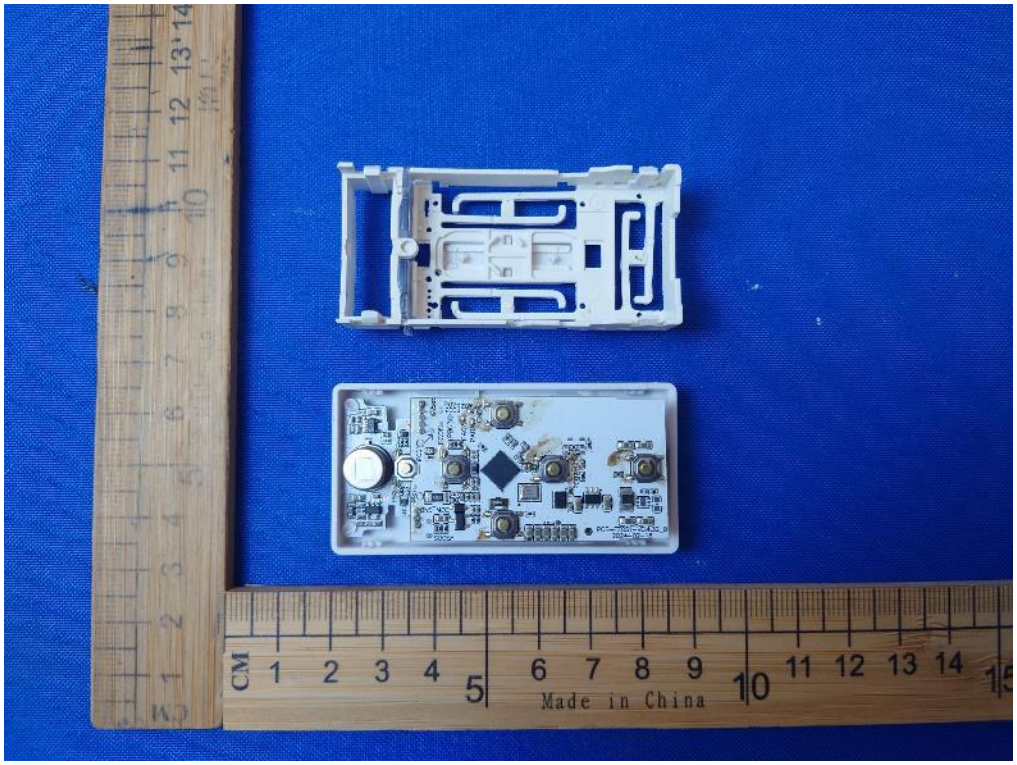
CM
Made in China

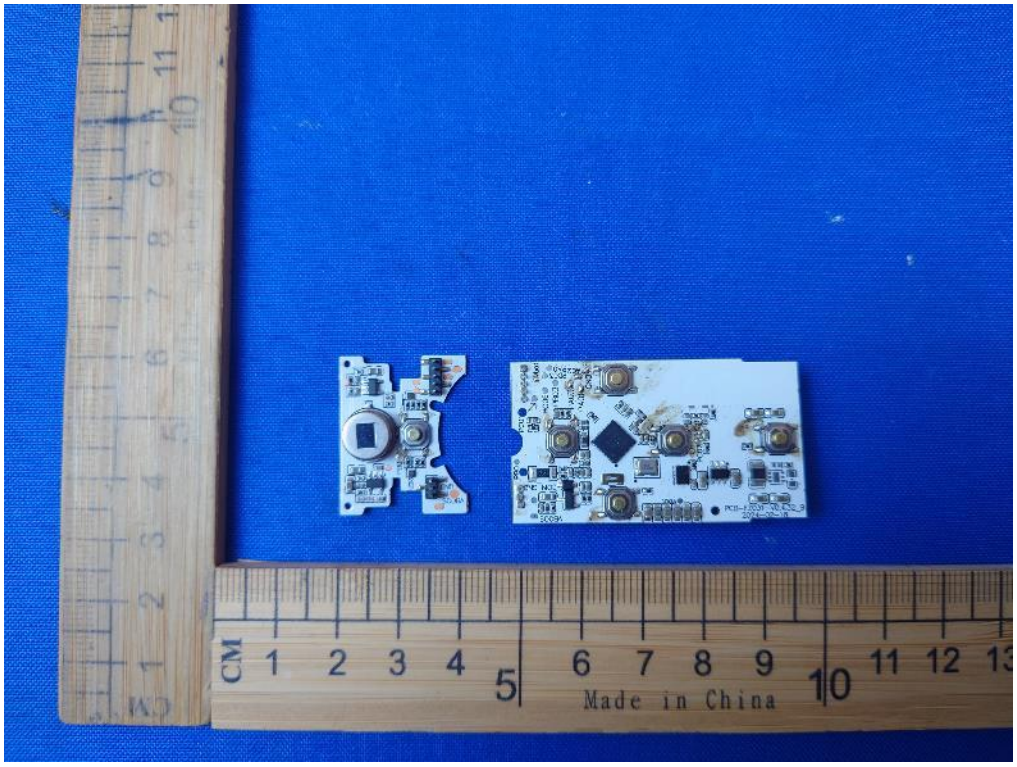
CM
Made in China

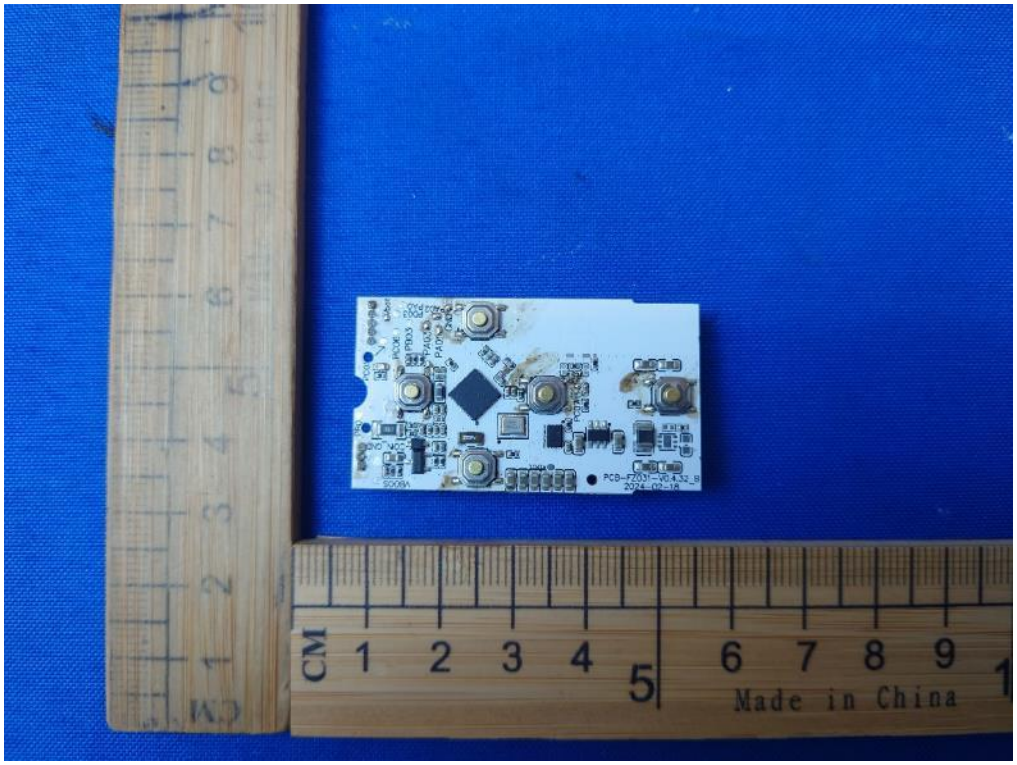
CM
Made in China

CM 1 2 3 4 5 6 7 8 9 10
Made in China

CM 1 2 3 4 5 6 7 8 9
Made in China

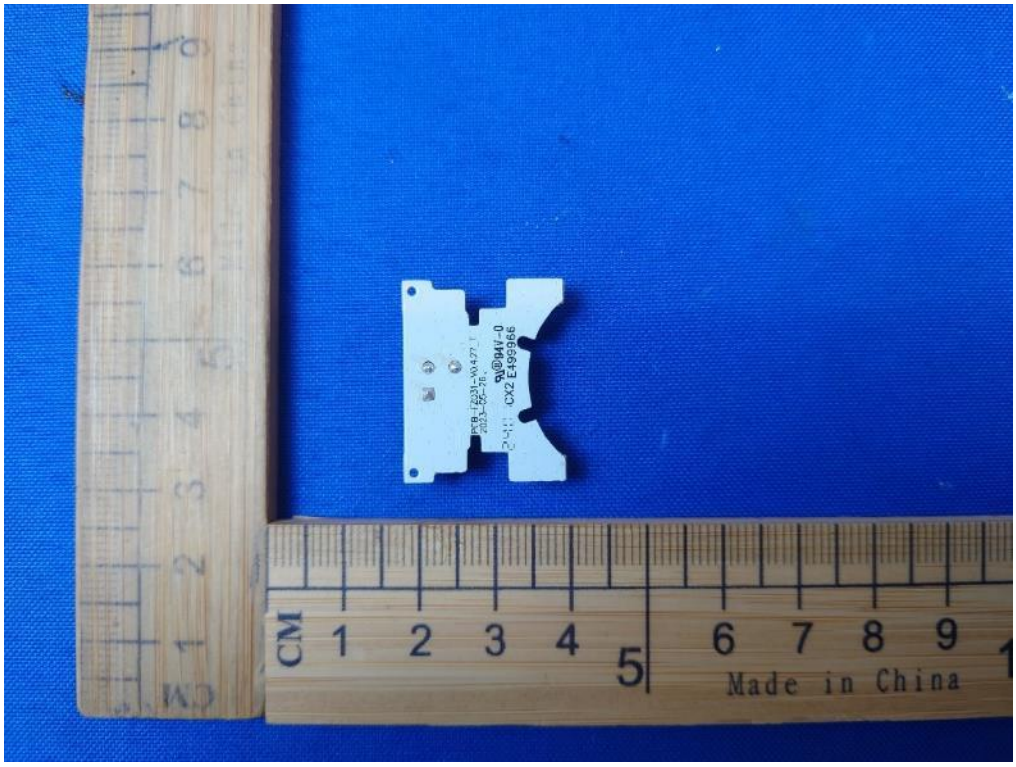
CM 1 2 3 4 5 6 7 8 9
Made in China

CR2477
Malak
3V LITHIUM CELL JAPAN STD
CM 1 2 3 4 5 6 7 8 9 10
Made in China

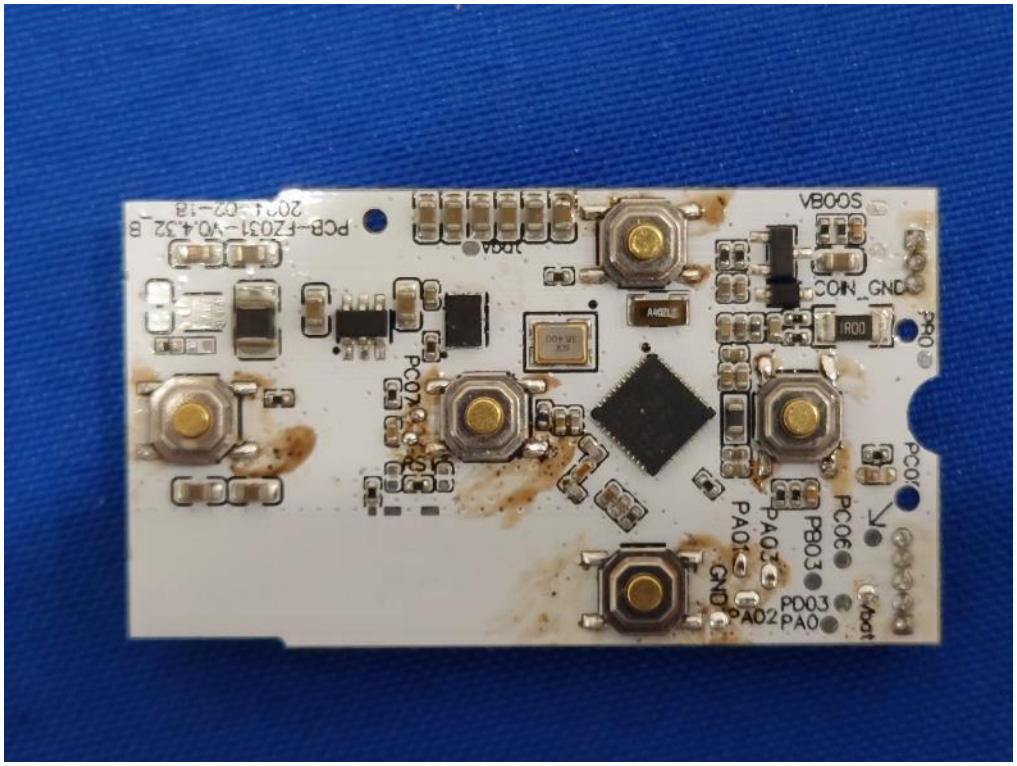
PCB-FZ031-V0.4.32_B
2024-02-18
VBOOS
COIN_GND
PC07
PA01
PA02
PA03
PB03
PC06
PD03
PA0
GND
PC07
RST

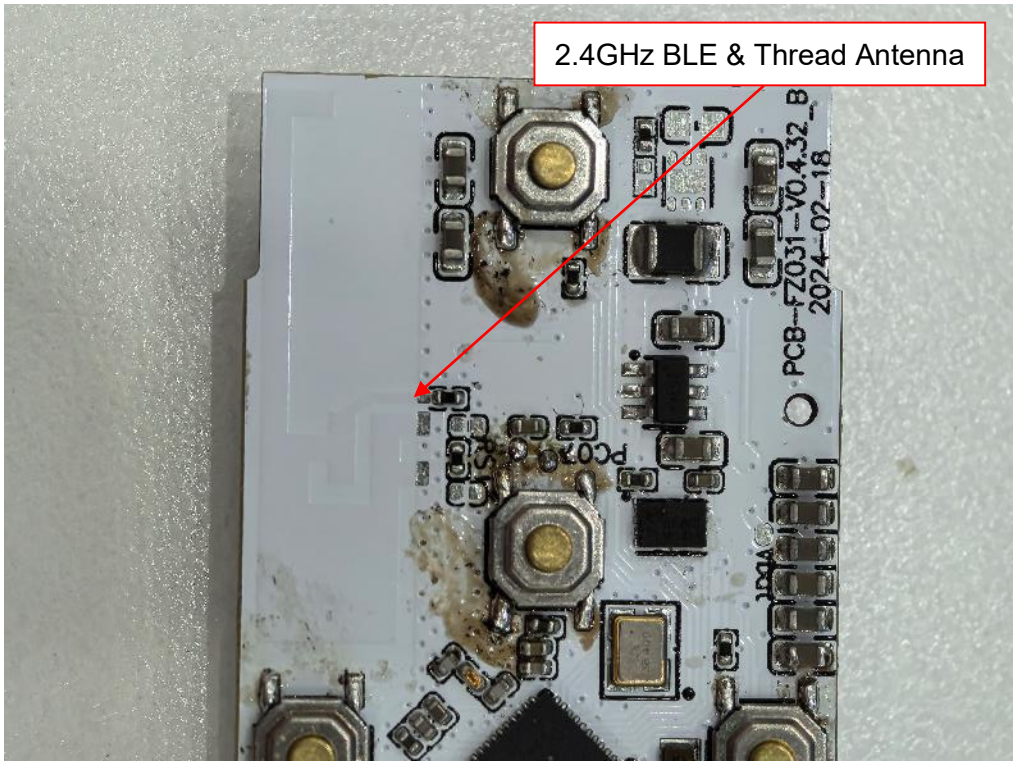
2.4GHz BLE & Thread Antenna
PCB-FZ031-V0.4.32_B
2024-02-18
PC07
RST