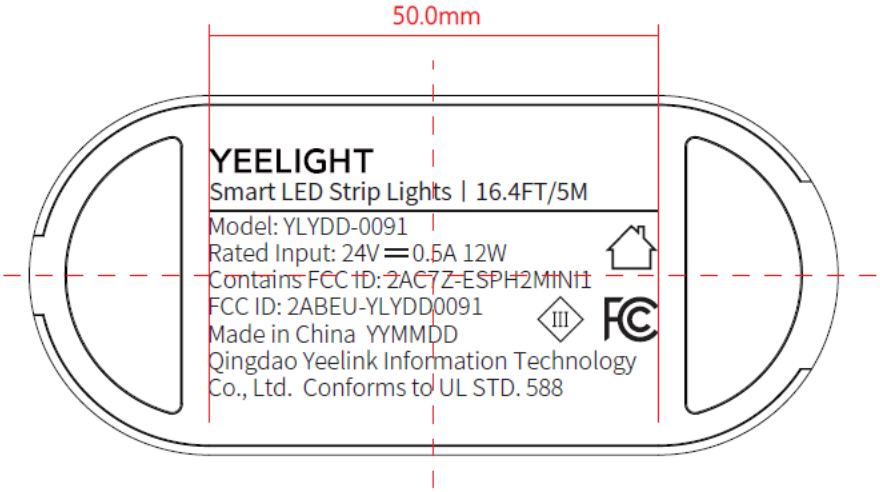
50.0mm
YEELIGHT
Smart LED Strip Lights | 16.4FT/5M
Model: YLYDD-0091
Rated Input: 24V ⎓ 0.5A 12W
Contains FCC ID: 2AC7Z-ESPH2MINI1
FCC ID: 2ABEU-YLYDD0091
Made in China YYMMDD
Qingdao Yeelink Information Technology
Co., Ltd. Conforms to UL STD. 588

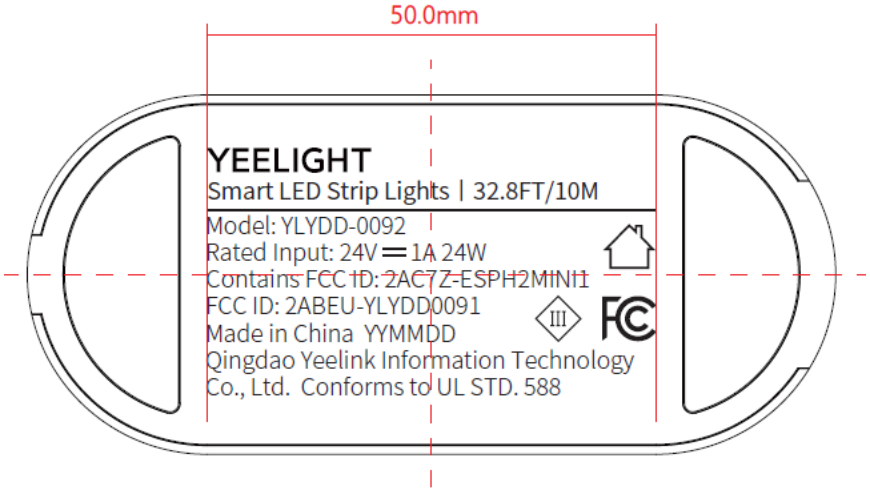
50.0mm
YEELIGHT
Smart LED Strip Lights | 32.8FT/10M
Model: YLYDD-0092
Rated Input: 24V ⎓ 1A 24W
Contains FCC ID: 2AC7Z-ESPH2MINI1
FCC ID: 2ABEU-YLYDD0091
Made in China YYMMDD
Qingdao Yeelink Information Technology
Co., Ltd. Conforms to UL STD. 588

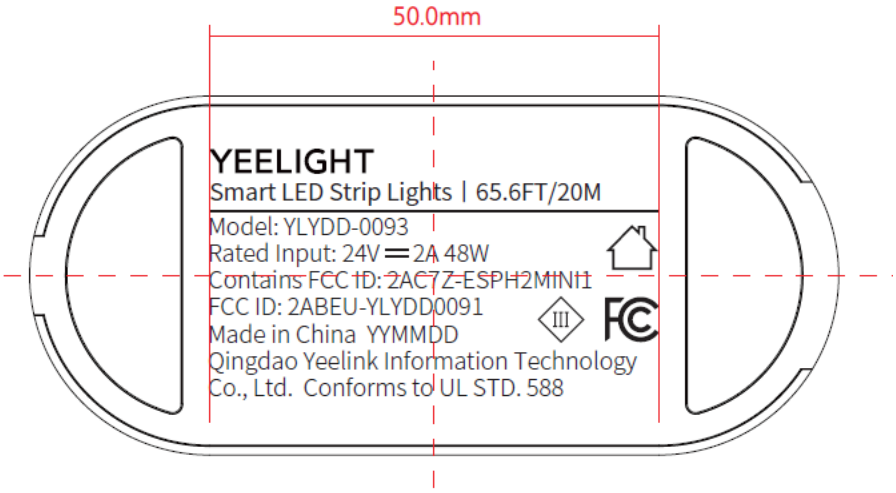
50.0mm
YEELIGHT
Smart LED Strip Lights | 65.6FT/20M
Model: YLYDD-0093
Rated Input: 24V ⎓ 2A 48W
Contains FCC ID: 2AC7Z-ESPH2MINI1
FCC ID: 2ABEU-YLYDD0091
Made in China YYMMDD
Qingdao Yeelink Information Technology
Co., Ltd. Conforms to UL STD. 588

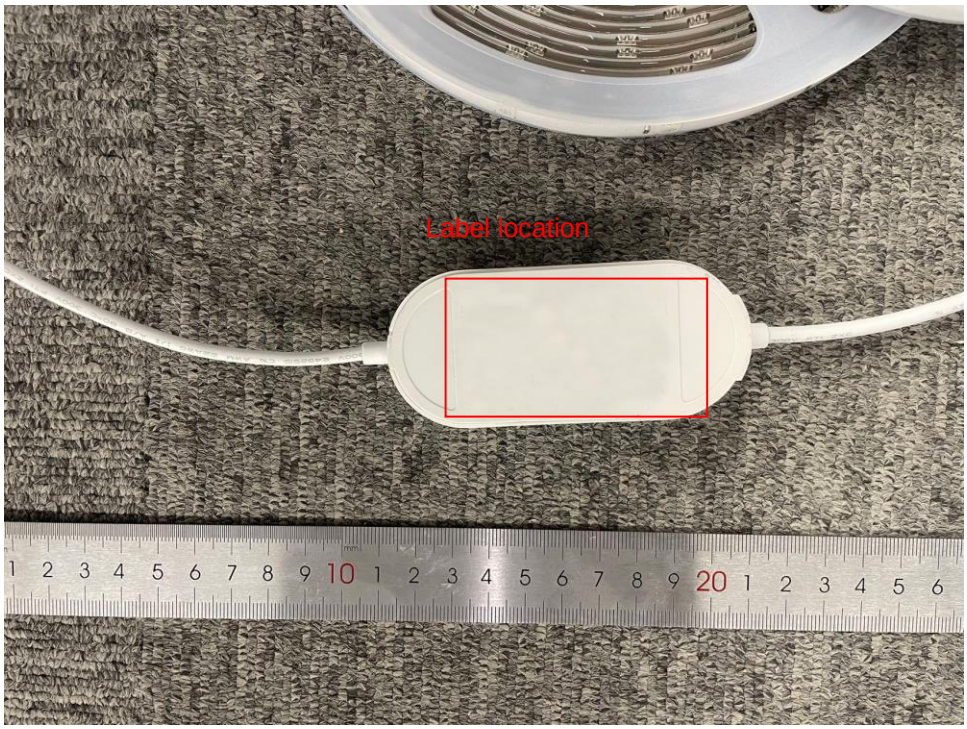
Label location