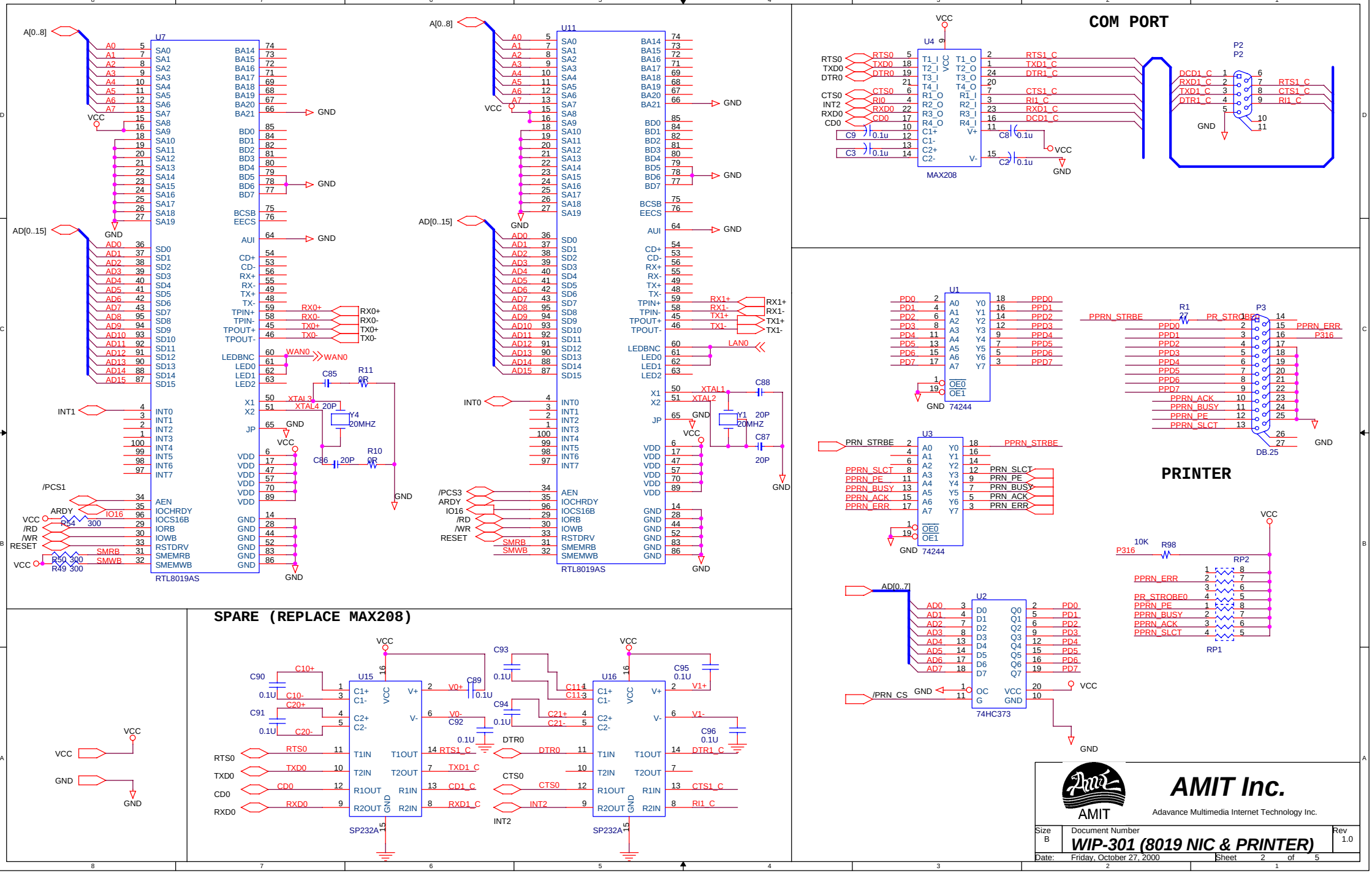
COM PORT
PRINTER
SPARE (REPLACE MAX208)
U7
RTL8019AS
U11
RTL8019AS
U4
MAX208
P2
U1
74244
U3
74244
U2
74HC373
P3
DB.25
RP1
RP2
U15
SP232A
U16
SP232A
VCC
GND
A[0..8]
AD[0..15]
AD[0..7]
/PCS1
/PCS3
/PRN_CS
RX0+
RX0-
TX0+
TX0-
RX1+
RX1-
TX1+
TX1-
WAN0
LAN0
XTAL1
XTAL2
XTAL3
XTAL4
Y4
20MHZ
Y1
20MHZ
C85
R11
0R
C86
R10
0R
C88
C87
20P
R54
300
R50
300
R49
300
RTS0
TXD0
DTR0
CTS0
RI0
RXD0
CD0
INT2
RTS1_C
TXD1_C
DTR1_C
CTS1_C
RI1_C
DCD1_C
RXD1_C
PPRN_STRBE
PPRN_SLCT
PPRN_PE
PPRN_BUSY
PPRN_ACK
PPRN_ERR
PR_STROBE0
PPRN_STRBE
PPD0
PPD1
PPD2
PPD3
PPD4
PPD5
PPD6
PPD7
P316
10K
R98
AMIT Inc.
AMIT
Adavance Multimedia Internet Technology Inc.
Size
B
Document Number
WIP-301 (8019 NIC & PRINTER)
Rev
1.0
Date:
Friday, October 27, 2000
Sheet
2
of
5