60-4349_Tx49 Production Sample.sch-1 - Sat Jul 26 14:16:16 2003

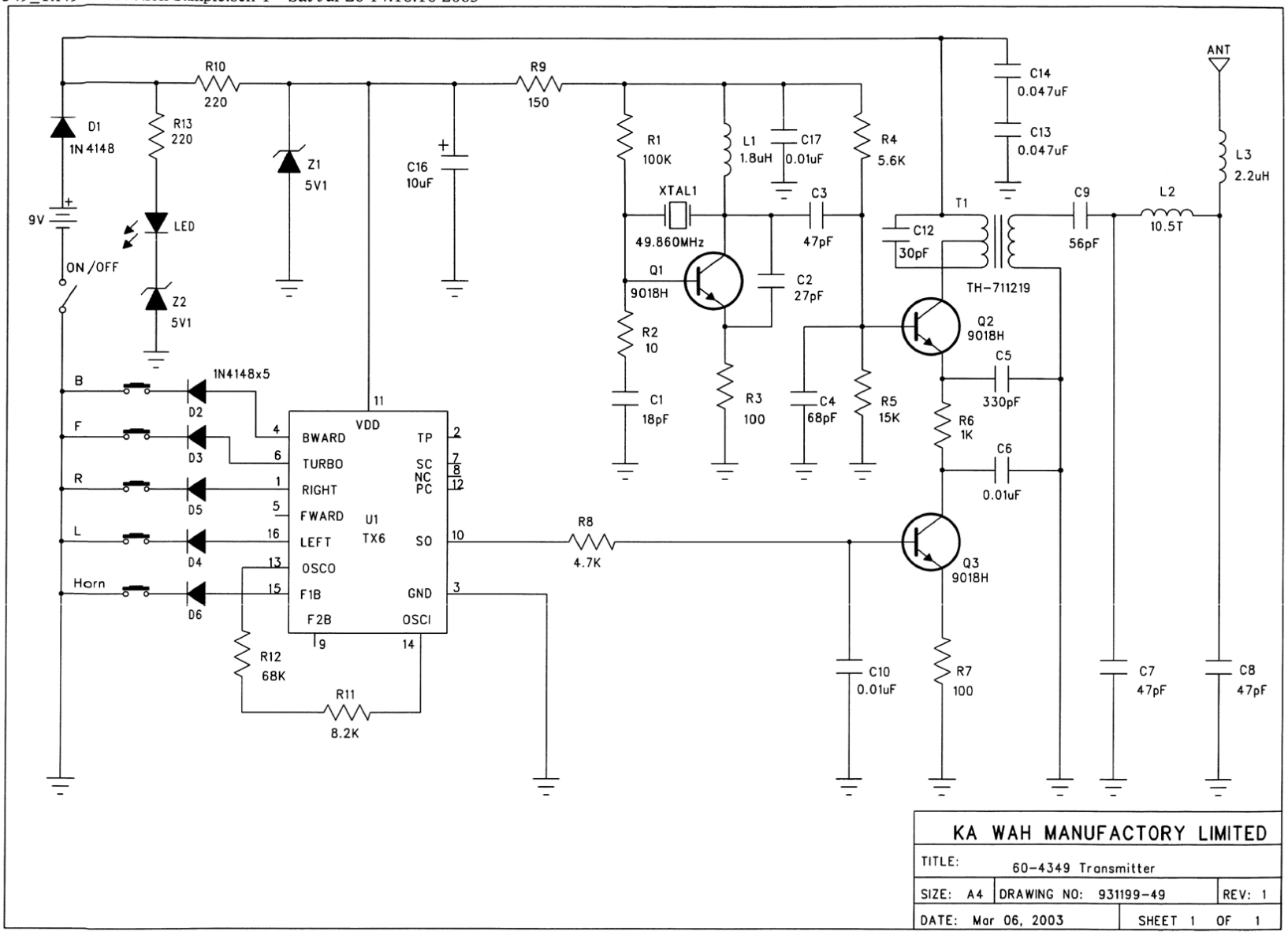

KA WAH MANUFACTORY LIMITED		
TITLE: 60-4349 Transmitter		
SIZE: A4	DRAWING NO: 931199-49	REV: 1
DATE: Mar 06, 2003	SHEET 1 OF 1	