#01_WLAN2.4GHz_802.11b 1Mbps_Bottom Face_0mm_Ch11;Ant 2

Communication System: 802.11b ; Frequency: 2462 MHz;Duty Cycle: 1:1.015
Medium: MSL_2450_171123 Medium parameters used: f = 2462 MHz; σ = 1.966 S/m; ε_r = 53.38; ρ = 1000 kg/m^3
Ambient Temperature：23.2 ℃; Liquid Temperature：22.2 ℃

DASY5 Configuration:
- Probe: EX3DV4 - SN3925; ConvF(7.94, 7.94, 7.94); Calibrated: 2017/5/24;
- Sensor-Surface: 1.4mm (Mechanical Surface Detection)
- Electronics: DAE4 Sn854; Calibrated: 2017/5/2
- Phantom: ELI v5.0; Type: QDOVA002AA; Serial: TP:1238
- Measurement SW: DASY52, Version 52.8 (8);SEMCAD X Version 14.6.10 (7331)

Area Scan (61x81x1): Interpolated grid: dx=1.200 mm, dy=1.200 mm
Maximum value of SAR (interpolated) = 1.55 W/kg

Zoom Scan (7x7x7)/Cube 0: Measurement grid: dx=5mm, dy=5mm, dz=5mm
Reference Value = 28.09 V/m; Power Drift = -0.11 dB
Peak SAR (extrapolated) = 2.24 W/kg
SAR(1 g) = 0.870 W/kg; SAR(10 g) = 0.350 W/kg
Maximum value of SAR (measured) = 1.70 W/kg

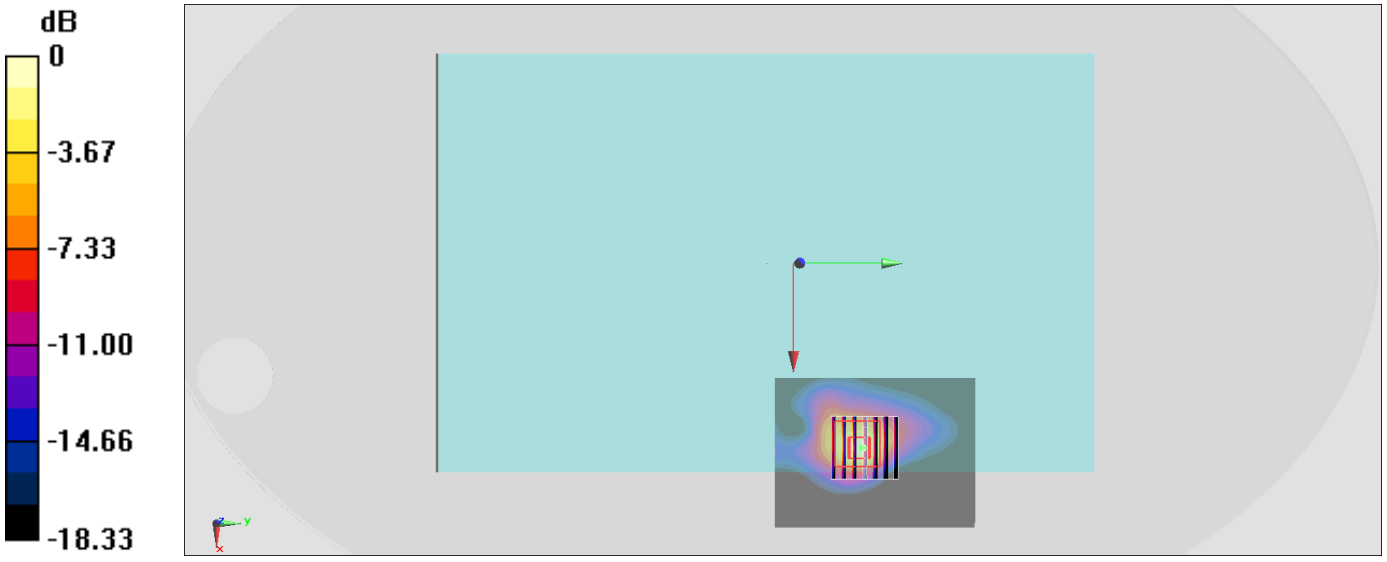

0 dB = 1.70 W/kg = 2.30 dBW/kg

#02_WLAN5GHz_802.11n-HT40 MCS0_Edge 1_0mm_Ch54;Ant 2

Communication System: 802.11n; Frequency: 5270 MHz;Duty Cycle: 1:1.032
Medium: MSL_5G_171122 Medium parameters used: f = 5270 MHz; σ = 5.215 S/m; ε_r = 46.784; ρ = 1000 kg/m^3
Ambient Temperature：23.5 ℃; Liquid Temperature：22.5 ℃

DASY5 Configuration:
- Probe: EX3DV4 - SN3925; ConvF(4.59, 4.59, 4.59); Calibrated: 2017/5/24;
- Sensor-Surface: 1.4mm (Mechanical Surface Detection)
- Electronics: DAE4 Sn854; Calibrated: 2017/5/2
- Phantom: ELI v5.0; Type: QDOVA002AA; Serial: TP:1238
- Measurement SW: DASY52, Version 52.8 (8);SEMCAD X Version 14.6.10 (7331)

Area Scan (71x101x1): Interpolated grid: dx=1.000 mm, dy=1.000 mm
Maximum value of SAR (interpolated) = 2.04 W/kg

Zoom Scan (8x8x7)/Cube 0: Measurement grid: dx=4mm, dy=4mm, dz=1.4mm
Reference Value = 12.70 V/m; Power Drift = -0.13 dB
Peak SAR (extrapolated) = 3.79 W/kg
SAR(1 g) = 0.770 W/kg; SAR(10 g) = 0.196 W/kg
Maximum value of SAR (measured) = 1.95 W/kg

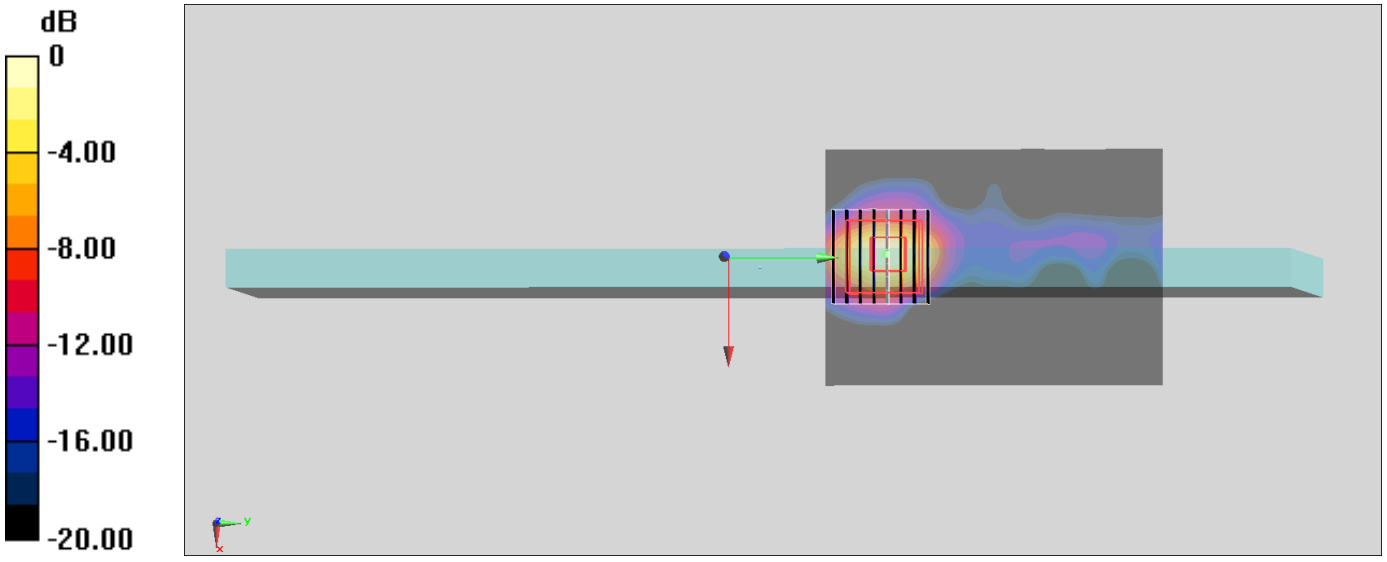

0 dB = 1.95 W/kg = 2.90 dBW/kg

#03_WLAN5GHz_802.11ac-VHT80 MCS0_Edge 1_0mm_Ch138;Ant 2

Communication System: 802.11ac; Frequency: 5690 MHz;Duty Cycle: 1:1.07
Medium: MSL_5G_171122 Medium parameters used: f = 5690 MHz; σ = 5.754 S/m; ε_r = 46.125; ρ = 1000 kg/m^3
Ambient Temperature：23.5 ℃; Liquid Temperature：22.5 ℃

DASY5 Configuration:
- Probe: EX3DV4 - SN3925; ConvF(4.17, 4.17, 4.17); Calibrated: 2017/5/24;
- Sensor-Surface: 1.4mm (Mechanical Surface Detection)
- Electronics: DAE4 Sn854; Calibrated: 2017/5/2
- Phantom: ELI v5.0; Type: QDOVA002AA; Serial: TP:1238
- Measurement SW: DASY52, Version 52.8 (8);SEMCAD X Version 14.6.10 (7331)

Area Scan (61x91x1): Interpolated grid: dx=1.000 mm, dy=1.000 mm
Maximum value of SAR (interpolated) = 1.89 W/kg

Zoom Scan (8x8x7)/Cube 0: Measurement grid: dx=4mm, dy=4mm, dz=1.4mm
Reference Value = 11.13 V/m; Power Drift = -0.13 dB
Peak SAR (extrapolated) = 8.85 W/kg
SAR(1 g) = 0.794 W/kg; SAR(10 g) = 0.197 W/kg
Maximum value of SAR (measured) = 1.96 W/kg

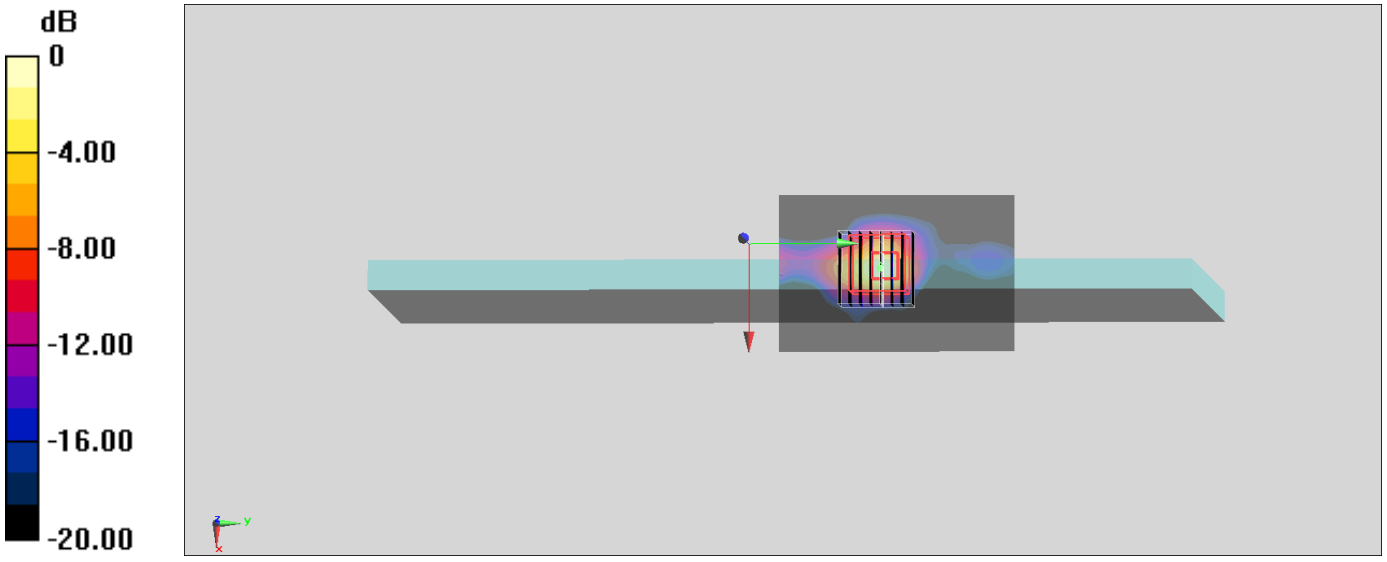

0 dB = 1.96 W/kg = 2.92 dBW/kg

#04_WLAN5GHz_802.11ac-VHT80 MCS0_Edge 2_0mm_Ch155;Ant 1

Communication System: 802.11ac; Frequency: 5775 MHz;Duty Cycle: 1:1.07
Medium: MSL_5G_171122 Medium parameters used: f = 5775 MHz; σ = 5.865 S/m; ε_r = 45.983; ρ = 1000 kg/m^3
Ambient Temperature：23.5 ℃; Liquid Temperature：22.5 ℃

DASY5 Configuration:
- Probe: EX3DV4 - SN3925; ConvF(4.14, 4.14, 4.14); Calibrated: 2017/5/24;
- Sensor-Surface: 1.4mm (Mechanical Surface Detection)
- Electronics: DAE4 Sn854; Calibrated: 2017/5/2
- Phantom: ELI v5.0; Type: QDOVA002AA; Serial: TP:1238
- Measurement SW: DASY52, Version 52.8 (8);SEMCAD X Version 14.6.10 (7331)

Area Scan (61x91x1): Interpolated grid: dx=1.000 mm, dy=1.000 mm
Maximum value of SAR (interpolated) = 1.67 W/kg

Zoom Scan (8x8x7)/Cube 0: Measurement grid: dx=4mm, dy=4mm, dz=1.4mm
Reference Value = 9.980 V/m; Power Drift = -0.08 dB
Peak SAR (extrapolated) = 3.27 W/kg
SAR(1 g) = 0.592 W/kg; SAR(10 g) = 0.131 W/kg
Maximum value of SAR (measured) = 1.80 W/kg

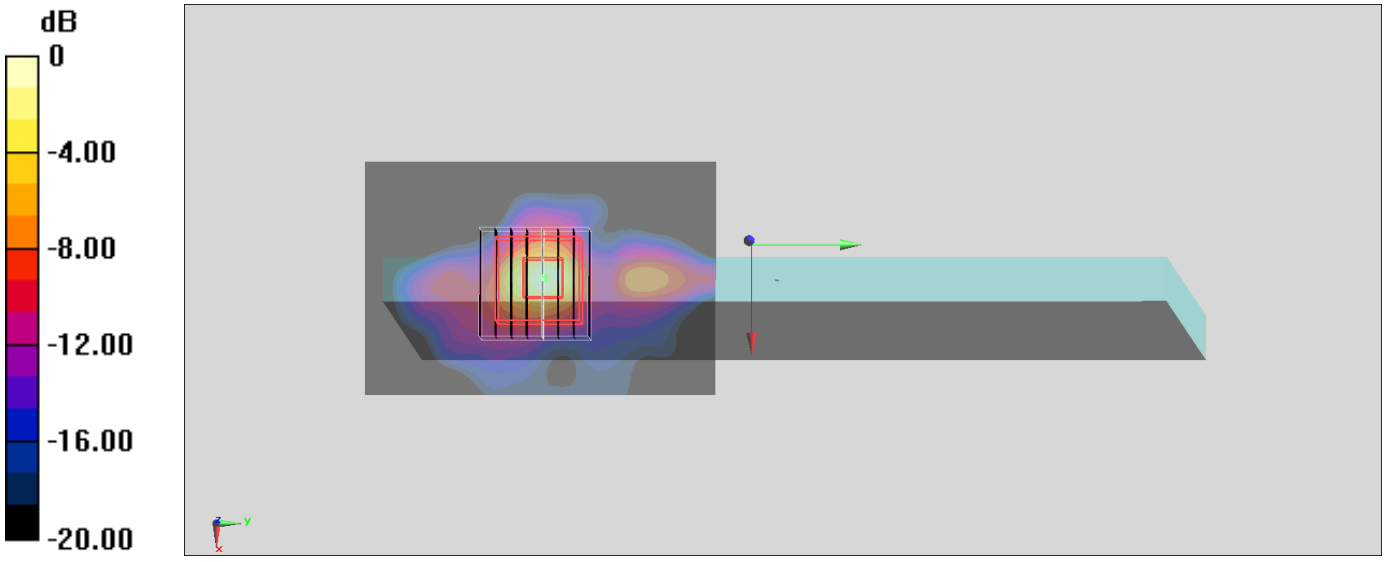

0 dB = 1.80 W/kg = 2.55 dBW/kg

#05_Bluetooth_1Mbps_Bottom Face_0mm_Ch78;Ant 2

Communication System: Bluetooth ; Frequency: 2480 MHz;Duty Cycle: 1:1.297
Medium: MSL_2450_171123 Medium parameters used: f = 2480 MHz; σ = 1.993 S/m; ε_r = 53.331; ρ = 1000 kg/m^3
Ambient Temperature：23.2 ℃; Liquid Temperature：22.2 ℃

DASY5 Configuration:
- Probe: EX3DV4 - SN3925; ConvF(7.94, 7.94, 7.94); Calibrated: 2017/5/24;
- Sensor-Surface: 1.4mm (Mechanical Surface Detection)
- Electronics: DAE4 Sn854; Calibrated: 2017/5/2
- Phantom: ELI v5.0; Type: QDOVA002AA; Serial: TP:1238
- Measurement SW: DASY52, Version 52.8 (8);SEMCAD X Version 14.6.10 (7331)

Area Scan (61x81x1): Interpolated grid: dx=1.200 mm, dy=1.200 mm
Maximum value of SAR (interpolated) = 0.463 W/kg

Zoom Scan (7x7x7)/Cube 0: Measurement grid: dx=5mm, dy=5mm, dz=5mm
Reference Value = 14.39 V/m; Power Drift = -0.06 dB
Peak SAR (extrapolated) = 0.605 W/kg
SAR(1 g) = 0.251 W/kg; SAR(10 g) = 0.102 W/kg
Maximum value of SAR (measured) = 0.464 W/kg

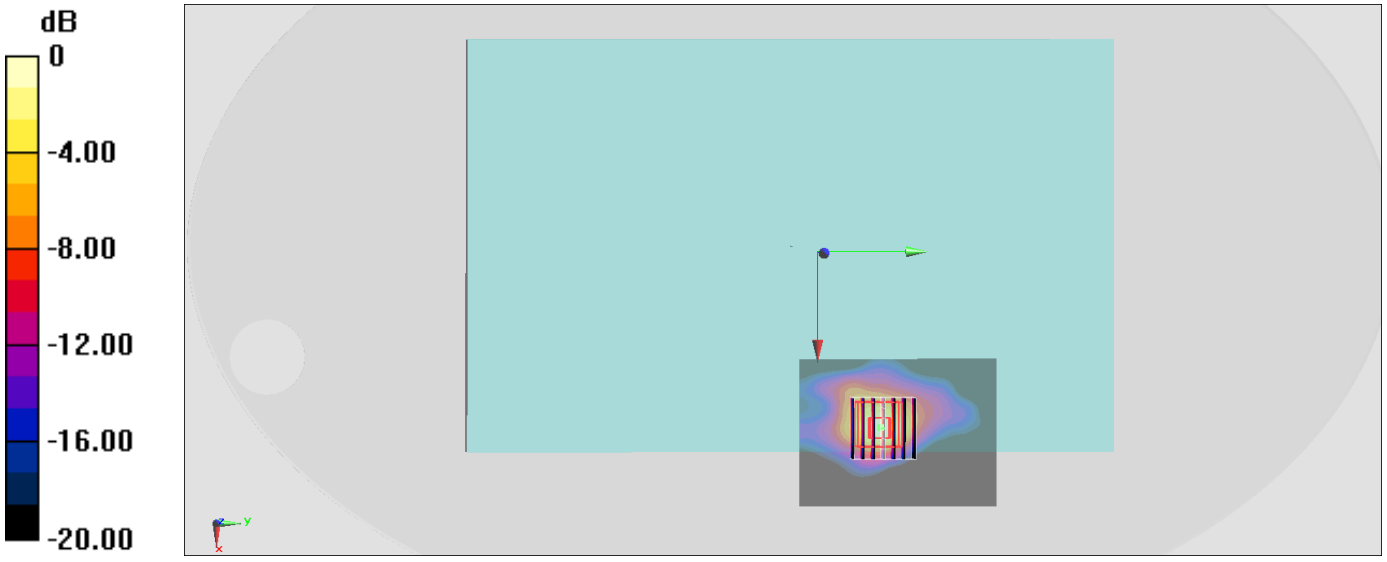

0 dB = 0.464 W/kg = -3.33 dBW/kg