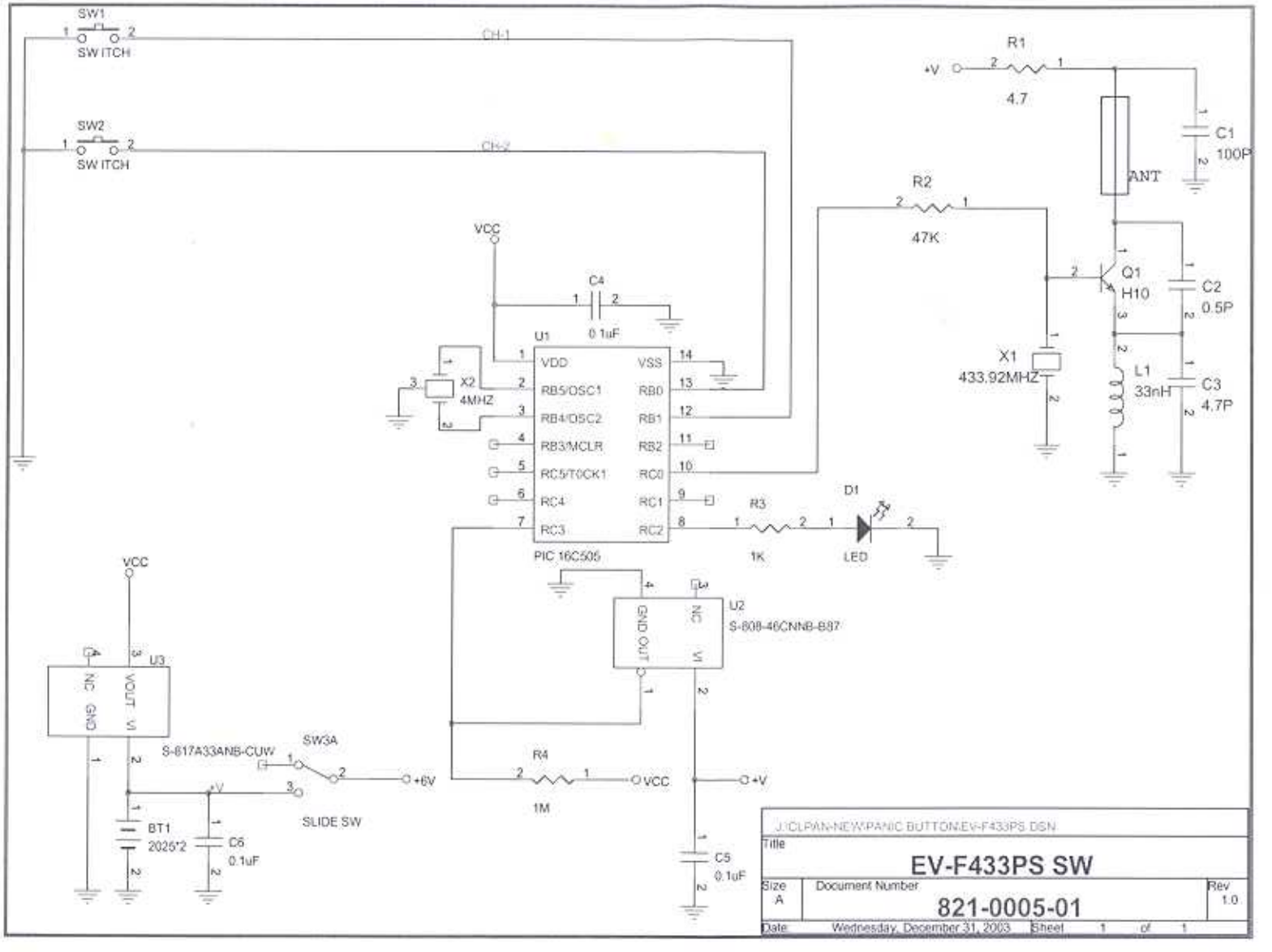
SW1
SW ITCH
SW2
SW ITCH
CH-1
CH-2
VCC
C4
0.1uF
U1
VDD
VSS
RB5/OSC1
RB0
RB4/OSC2
RB1
RB3/MCLR
RB2
RC5/T0CK1
RC0
RC4
RC1
RC3
RC2
PIC 16C505
X2
4MHZ
R1
4.7
+V
C1
100P
ANT
R2
47K
Q1
H10
C2
0.5P
X1
433.92MHZ
L1
33nH
C3
4.7P
R3
1K
D1
LED
U2
S-808-46CNNB-B87
GND OUT
NC
VI
U3
S-817A33ANB-CUW
NC
GND
VOUT
VI
SW3A
SLIDE SW
+6V
R4
1M
VCC
+V
BT1
2025*2
C6
0.1uF
C5
0.1uF
J:\CLPAN-NEW\PANIC BUTTON\EV-F433PS.DSN
Title
EV-F433PS SW
Size
A
Document Number
821-0005-01
Rev
1.0
Date
Wednesday, December 31, 2003
Sheet
1
of
1