ISSUE	REVISION	DATE:	MADE BY	APPROVED BY
1.0	FIRST RELEASE FOR PRODUCTION	6 Sep. 03	YHG	FRANKIE

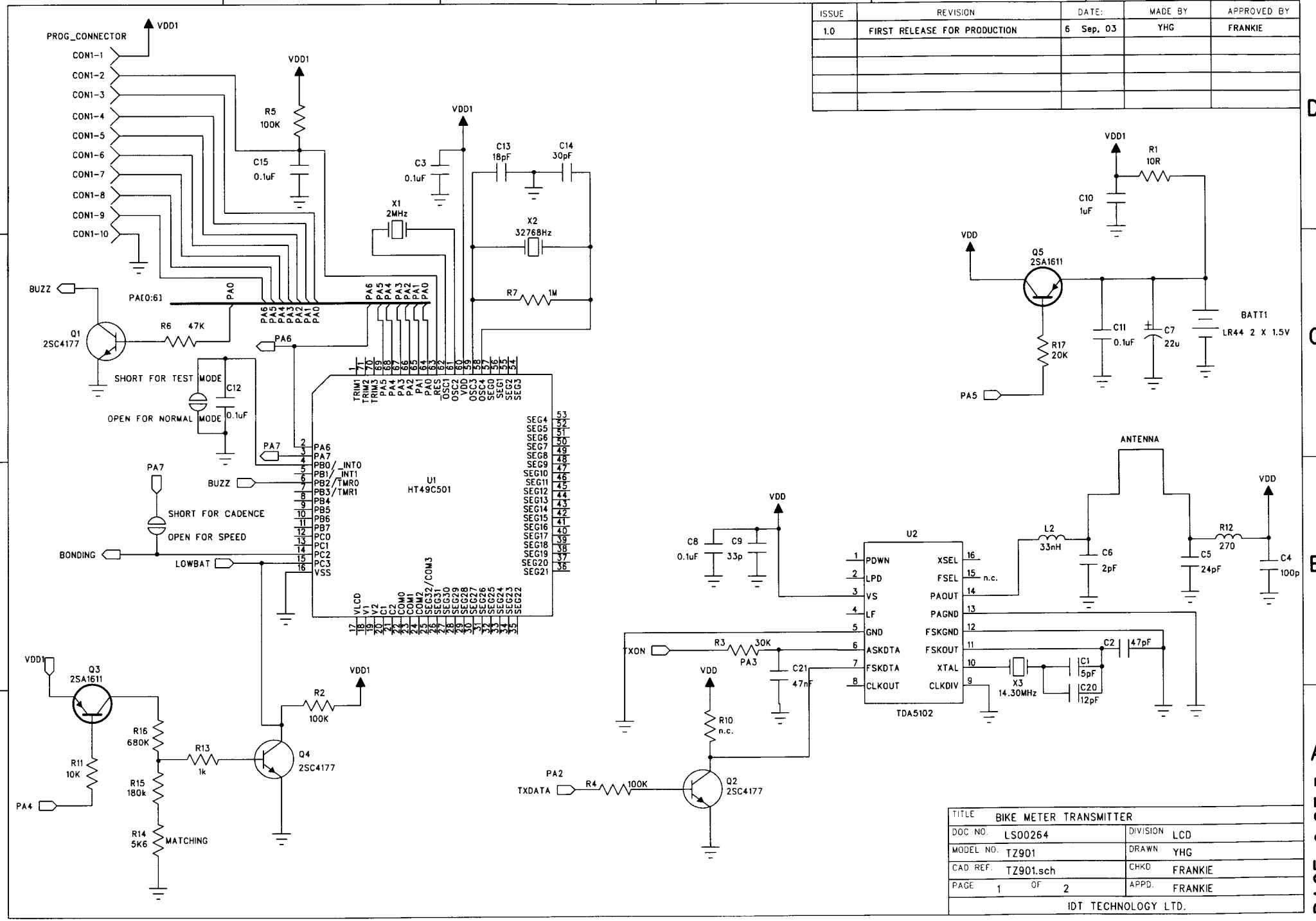

TITLE	BIKE METER TRANSMITTER
DOC NO. LS00264	DIVISION LCD
MODEL NO. TZ901	DRAWN YHG
CAD REF. TZ901.sch	CHKD FRANKIE
PAGE 1 OF 2	APPD. FRANKIE
IDT TECHNOLOGY LTD.	

PAGE 2 OF 3

LCD-PDD-019-A