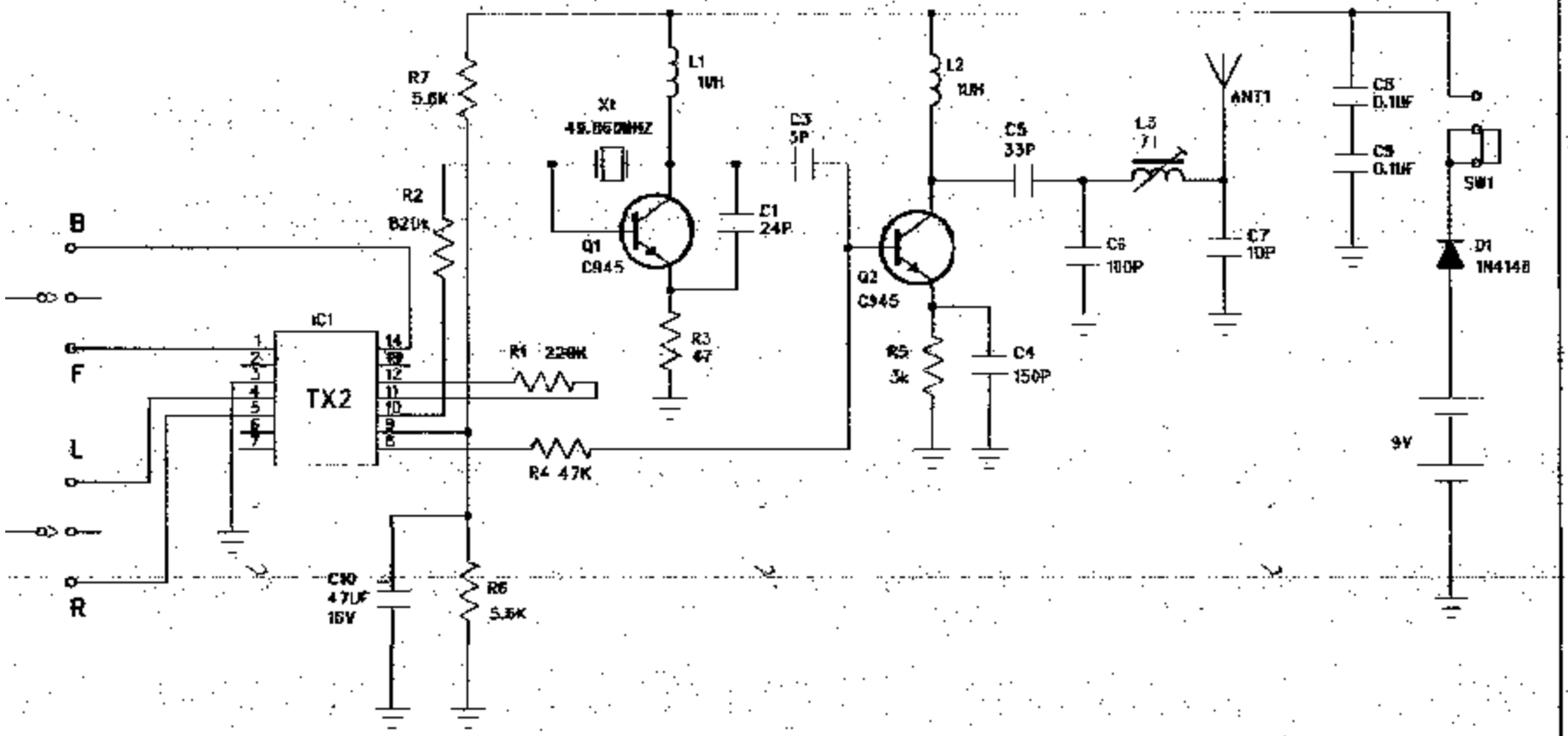

RESISTANCE VALUES ARE IN "ohm"
L CAPACITANCE VALUES ARE IN "UF"

DESIGNER		ECHO TOYS LTD	
		MODEL	60-4250T-49
		DWG NO	
		DATE	18 MAR 2000