REV	CHANGE NO.	CHANGE DATE	DESCRIPTION OF CHANGE	SIGN

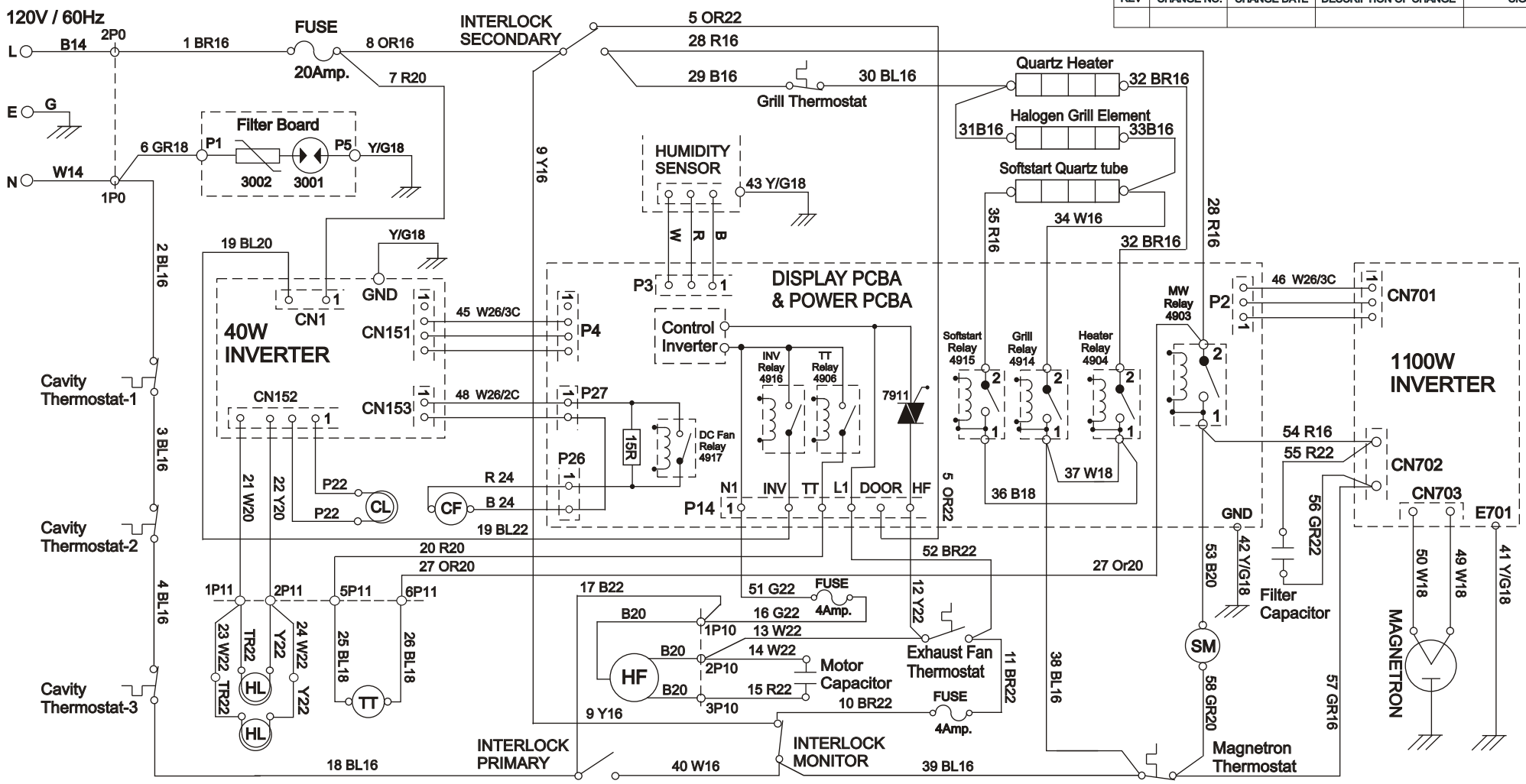

CONDITION: DOOR OPEN

SYMBOL NOTES

- (CL) CAVITY LAMP
- (HL) HOOD LAMP (COOKTOP LAMP)
- (SM) STIRRER MOTOR
- (TT) TURNTABLE MOTOR
- (CF) COOLING FAN MOTOR (DC FAN MOTOR)
- (HF) HOOD EXHAUST FAN MOTOR

P1/P2/P3/P4/P5/P14/P26/P27/CN1/CN151/CN152 /CN153/CN701/CN702/CN703: WIRE TO PCB CONNECTORS

P0/P10/P11: WIRE TO WIRE CONNECTORS

B: BLACK	W: WHITE	BR: BROWN
BL: BLUE	G: GREEN	OR: ORANGE
R: RED	Y: YELLOW	GR: GREY
TR: TRANSPARENT		P: PINK

1 BR16 — WIRE SIZE - AWG16
WIRE COLOUR - BROWN
WIRE NO. - 1

45 W26/3C — RIBBON CABLE / 3 Core

RELEASE FOR:
- ☐ QUOTATION
- ☐ TOOL MAKING REQ. QTY. _____ PCS
- ☐ PURCHASING REQ. QTY. _____ PCS
- ☐ MODIFICATION REQ. QTY. _____ PCS
- ☐ UPDATE DWG.
- ☑ REFERENCE
- ☐ _____

APP. BY _____

DATE _____

Whirlpool HOME APPLIANCES

Shunde Whirlpool Electrical Appliances Co. , Ltd.

DESIGNER: Dai, Xu Lei		TITLE: SCHEMATIC DIAGRAM	
DATE: SEP. 6, 2002			
FIRST USE MODEL NO: VENUS II		DWG. NO. MU-064A (with filter board)	
ASSEMBLE TO:		SCALE:	UNIT: A4
GENERAL TOLERANCES:		3rd PROJ	SHEET OF

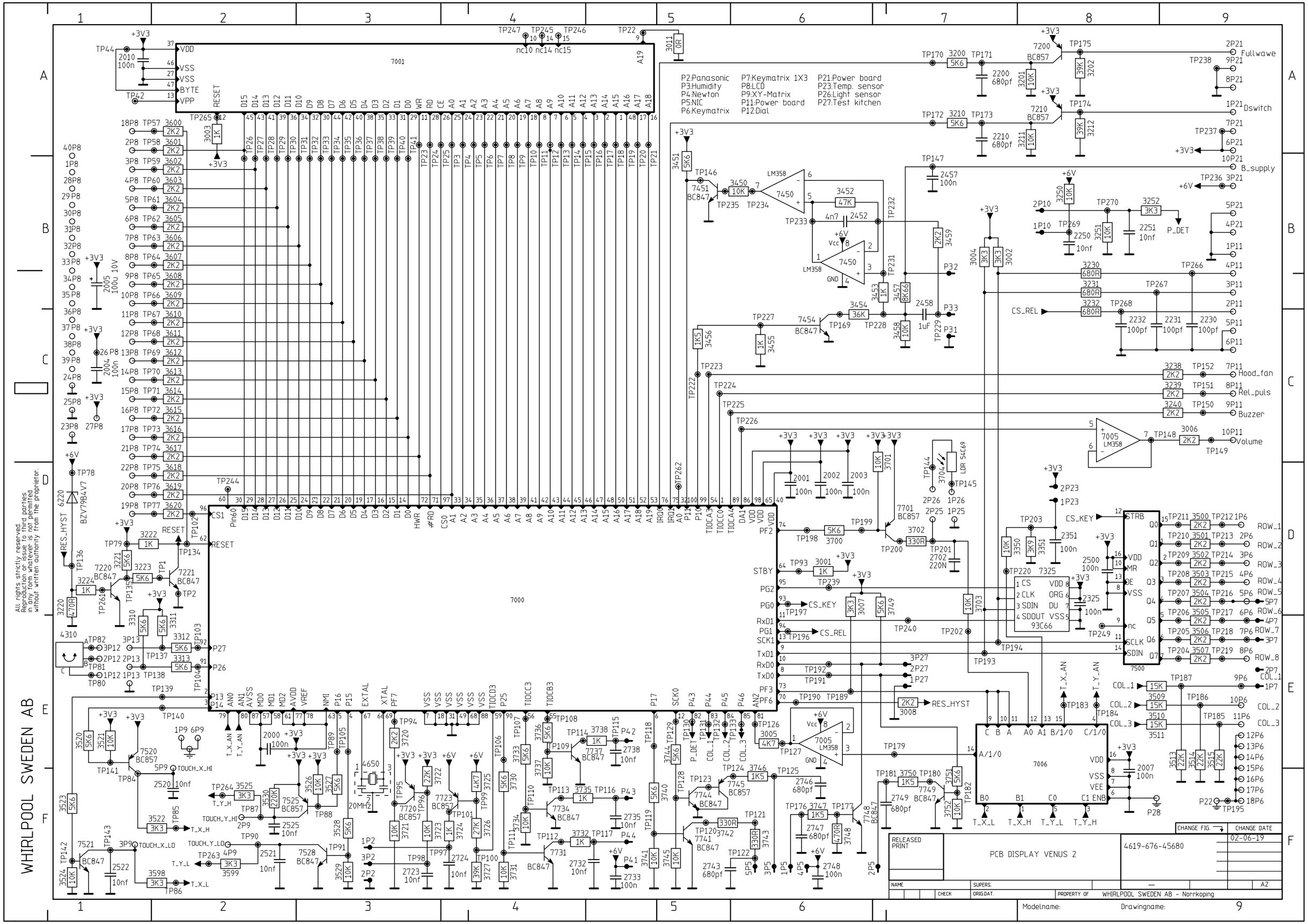
P2:Panasonic
P3:Humidity
P4:Newton
P5:NIC
P6:Keymatrix
P7:Keymatrix 1X3
P8:LCD
P9:XY-Matrix
P11:Power board
P12:Dial
P21:Power board
P23:Temp. sensor
P26:Light sensor
P27:Test kitchen
7001
7000
7500
7006
7325
93C66
LM358
Fullwave
Dswitch
B_supply
P_DET
CS_REL
Hood_fan
Rel_puls
Buzzer
Volume
CS_KEY
ROW_1
ROW_2
ROW_3
ROW_4
ROW_5
ROW_6
ROW_7
ROW_8
COL_1
COL_2
COL_3
RESET
RES_HYST
TOUCH_X_HI
TOUCH_X_LO
TOUCH_Y_HI
TOUCH_Y_LO
20MHz
WHIRLPOOL SWEDEN AB
All rights strictly reserved.
Reproduction or issue to third parties
in any form whatever is not permitted
without written authority from the proprietor.
CHANGE FIG.
CHANGE DATE
02-06-19
RELEASED
PRINT
PCB DISPLAY VENUS 2
4619-676-45680
NAME
SUPERS.
CHECK
ORIG.DAT.
PROPERTY OF WHIRLPOOL SWEDEN AB - Norrkoping
A2
Modelname:
Drawingname:

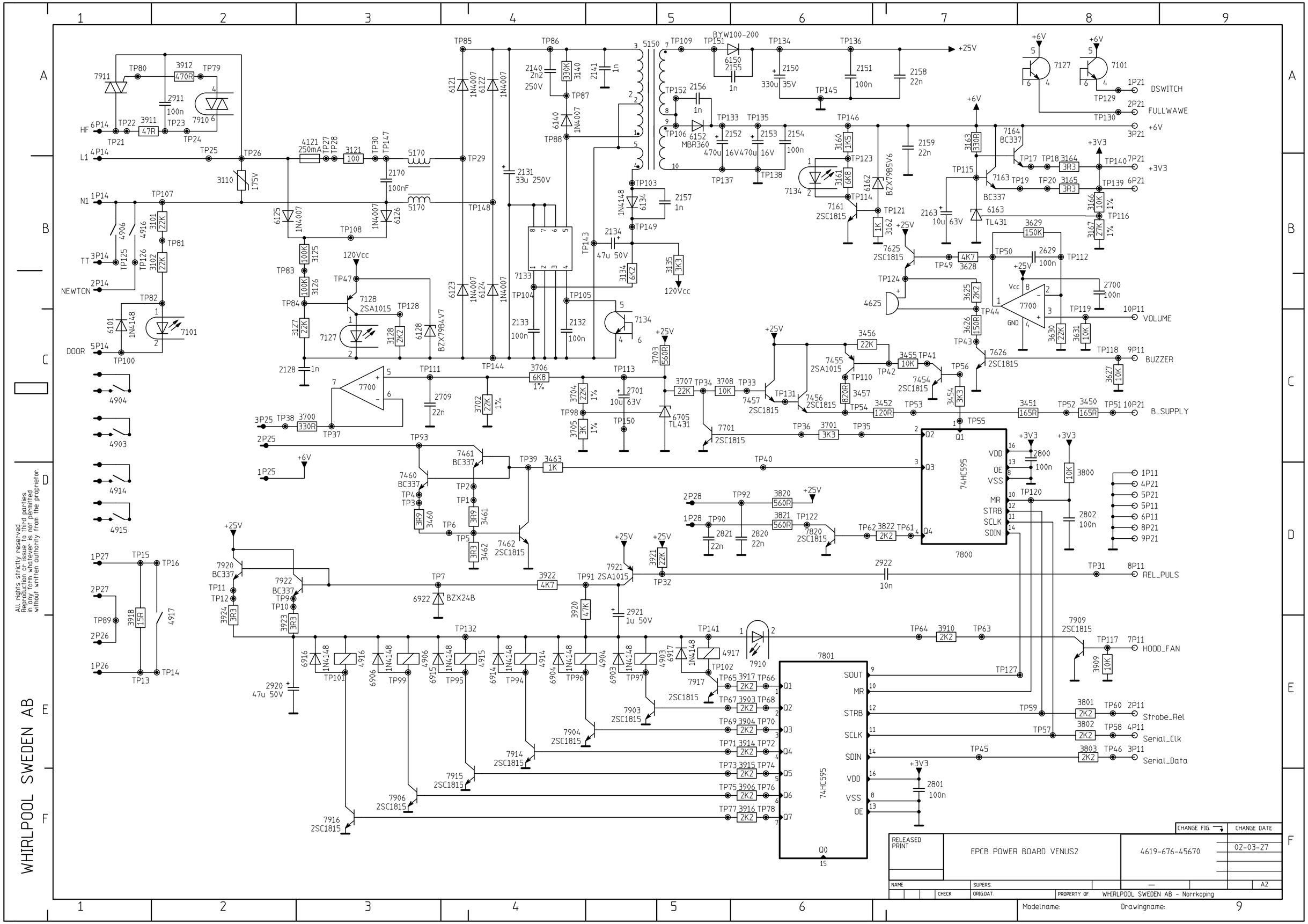
WHIRLPOOL SWEDEN AB
All rights strictly reserved.
Reproduction or issue to third parties
in any form whatever is not permitted
without written authority from the proprietor.
HF
L1
N1
TT
NEWTON
DOOR
DSWITCH
FULLWAWE
+6V
+3V3
VOLUME
BUZZER
B_SUPPLY
REL_PULS
HOOD_FAN
Strobe_Rel
Serial_Clk
Serial_Data
120Vcc
+25V
74HC595
7800
7801
7700
BYW100-200
MBR360
BZX79B5V6
BZX24B
TL431
RELEASED PRINT
EPCB POWER BOARD VENUS2
4619-676-45670
CHANGE FIG.
CHANGE DATE
02-03-27
NAME
SUPERS.
CHECK
ORIG.DAT.
PROPERTY OF
WHIRLPOOL SWEDEN AB - Norrkoping
A2
Modelname:
Drawingname: