Table 6-2. Replacement Parts, System Frame Assembly

Item Reference Number	Part Number	Description
ITM 1	2801-30714-506	Scr, MS, 2-56, X9/32, T1CR, FH100, SS, PS
ITM 2	1400-40007-400	Brkt, Battery Latch Plate
ITM 3	2114-20031-300	Term, Contact, Positive
ITM 4	2847-20035-000	Washer, Curved, Spring
ITM 5	2114-20033-693	Term, Standoff, WHT
ITM 6	1411-50702-204	Latch Plate Housing, Modified, GPH
ITM 7	2830-40007-500	Spring, Latch
ITM 8	2510-20034-900	Ring, .125, 5100-12CMD
ITM 9	6024-00000-001	Wire Buss, 24GA, Tin/Copper
ITM 10	1403-40009-303	Chassis Lower, STL, LPU
ITM 11	1403-40009-203	Chassis, Side, STL, LPU
ITM 12	2801-30714-509	Scr, MS, 2-56, X 1/8, T1CR, FH100, SS, PS
ITM 14	2800-20027-400	Spacer, Switch
ITM 15	2856-20003-301	Nut, Spanner,M5X0.50 (0.250 X 0.065)
ITM 16	1411-40005-600	Bushing, LED, Molded, EP
ITM 17	2509-50704-912	Inlay,Top,EPH5141,
ITM 18	2856-20003-302	Nut, Spanner, M6X0.75 (0.300x0.075)
ITM 19	2402-40004-701	Knob, Vol/Sq
ITM 20	1405-30093-200	Chan, Bezel. Sw, Molded, 16
ITM 23	2402-50541-602	Knob,Assy.,Channel-Select,W/Inlay (Used with Control Board Assembly 505-662 Rev. B, ELMA Switch)
ITM 24	6026-30315-803	Wire, Strnd, 26GA, 250V, Red Teflon
ITM 26	7011-20238-900	EPH/EPI,Lower-Lid,Assembly
ITM 27	7011-20238-800	EPH/EPI,Top-Lid,Assembly
ITM 28	2832-30737-505	Scr, 0-80X3/8, PHP
ITM 31	1411-40005-400	Antenna, Bushing, Molded, EP
ITM 32	1411-40005-700	Antenna, Nut, Molded, EP
ITM 33	1411-50701-404	Plate, Top, Blk, GPH
ITM 34	2512-20034-200	O Ring, 1.693 X .039
ITM 35	1411-40004-200	Boot, Sw,Molded, EP, Pos xxxo
ITM 36	2801-30714-510	Scr, MS, 2-56, X 3/16, T1CR, FH100, SS, PS
ITM 38	3102-00000-002	Tubing, Htshrk, BLK, Fit105, 3/32
ITM 40	2847-20035-001	Washer, Curved, Spring
ITM 41	2840-30191-936	Washer, .140x.281, Ss
ITM 42	2512-20031-600	Gasket, Latch, PLT HSG
ITM 43	1601-20032-700	Tape, microthin
ITM 44	1601-20073-401	Tape, Sealing, tan
ITM 45	2840-20028-600	Washer,Channel-Sel,
C1	1501-20082-515	Cap, Cd, LL, 330PF, 50V
C2	1524-20065-501	Cap, CDd, 4.7 PF, 100V
F1	5106-20046-109	Fuse, 4A, 125V, Mld, Axl
J13	2114-40007-600	Conn, Adptr, RF
L1	1801-20061-006	Ind, Fxd AW Coil, 6T, 22GA, "SEE TEXT"
P3	7011-20170-700	VHF_Cable_Assy_Coax_Plug

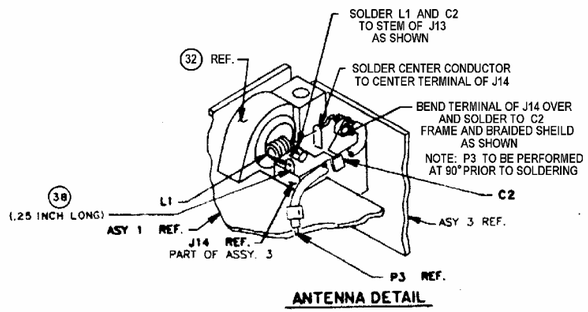

ANTENNA DETAIL

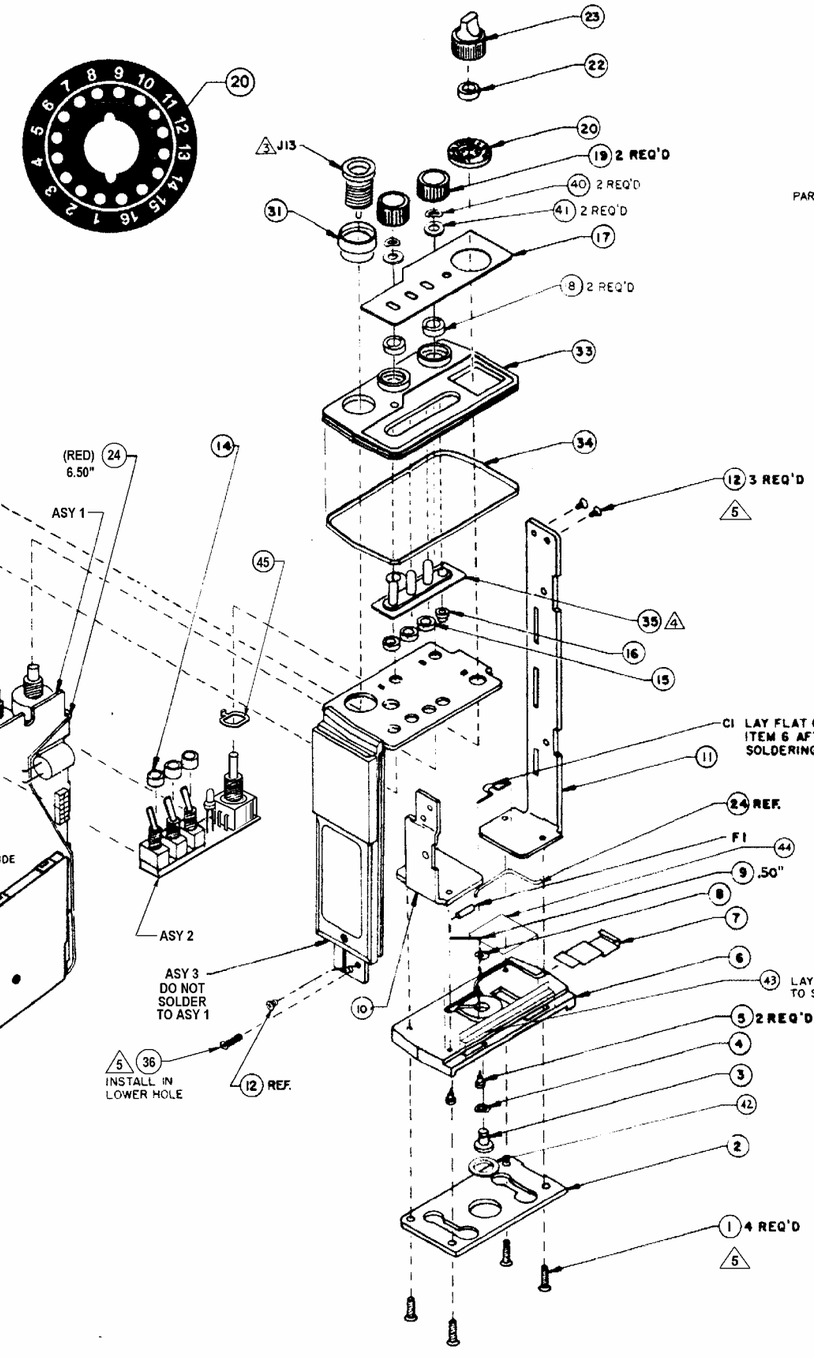

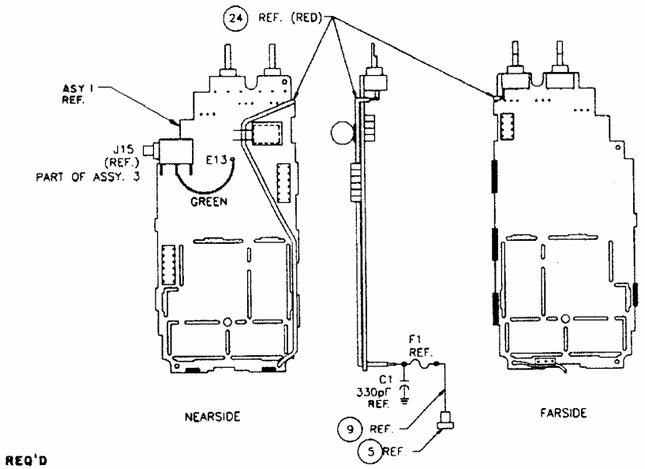

SCHEMATIC DIAGRAM

NOTES

1. TO COMPLETE ASSEMBLY SOLDER ASY 2 INTO ASY 1 AND ASY 1 INTO CHASSIS (ITEMS 10 AND 11). SOLDERING LOCATIONS ARE DENOTED BY CROSS-HATCHING ON THE SCHEMATIC DIAGRAM.
2. PARTS COMMON TO ALL ASSEMBLIES UNLESS OTHERWISE SPECIFIED ON BILL OF MATERIAL.

3 PLACE A SMALL AMOUNT OF ITM 39 (016-01412-0000) ON THE THREADS AND TORQUE TO 12 IN LBS. (13.8 kg/cu).

4 INVERT EACH UNUSED NIPPLE INTO OPEN SPACE CREATED BY THE MISSING TOGGLE SWITCH THIS WILL ALLOW ITM 17 TO MOUNT FLUSH.

5 PLACE A SMALL AMOUNT OF LOCTITE 425 ON THE THREADS.

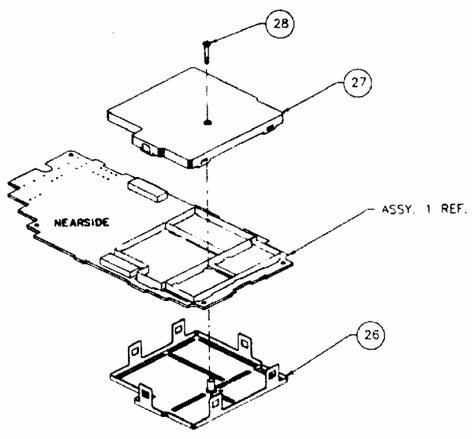

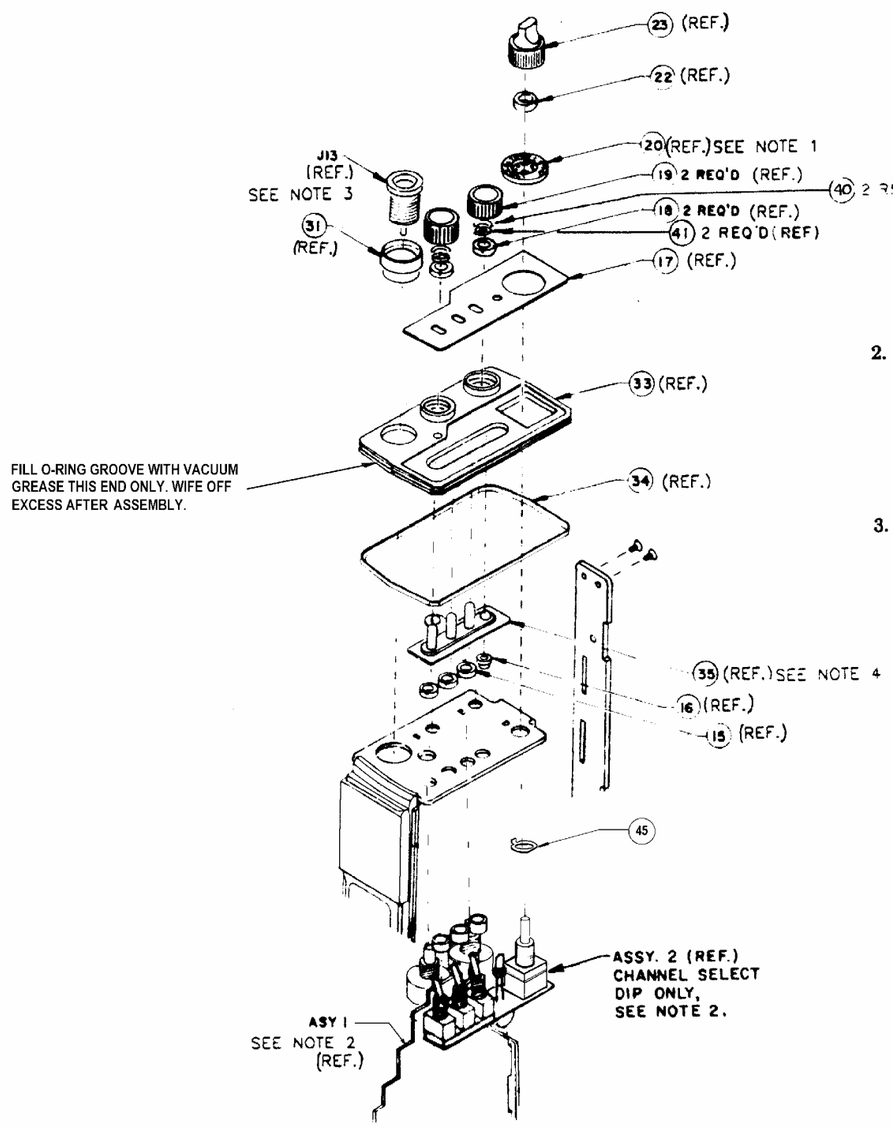

NOTES:

1. UNDERCOAT BOTTOM SURFACE OF BEZEL (ITEM 20) WITH VACUUM GREASE BEFORE INSTALLATION INTO TOP PLATE RECESS. ALLOW GREASE TO FILL ALL STOP PIN HOLES. KNOB WILL CONCEAL EXCESS GREASE.

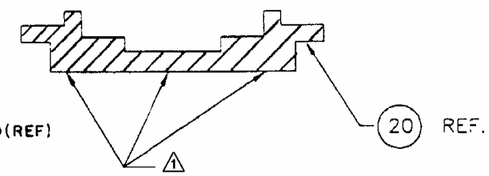

UNDERCOAT ENTIRE SURFACE AS SHOWN

2. APPLY VACUUM GREASE TO THREADED BUSHING. FILL ALL THREADS BEFORE INSTALLING SPANNER NUT. INSTALLATION OF SPANNER NUT WILL FORCE VACUUM GREASE INTO RECESSES SEALING ALL POINTS OF MOISTURE ENTRY.

3. COAT FLANGE SURFACE WITH VACUUM GREASE AS SHOWN. WIPE OFF EXCESS AFTER INSTALLATION.

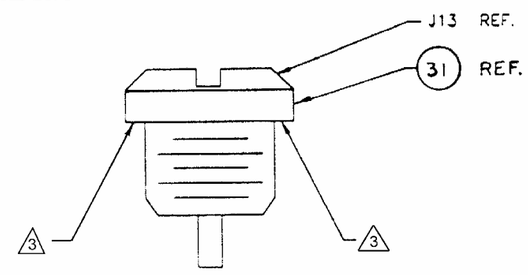

4. APPLY A THIN LAYER OF VACUUM GREASE TO THE CONTINUOUS SURFACE INDICATED. THIS LAYER WILL SEAL ALL POINTS OF MOISTURE ENTRY. WIPE OFF EXCESS AFTER INSTALLATION OF INLAY (ITEM 17).

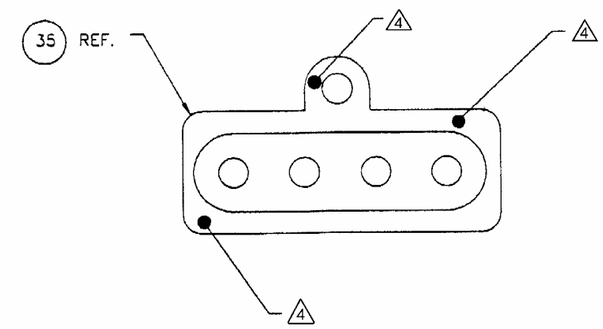

Table 6-3. Replacement Parts, Control Board

Item Reference Number	Part Number	Description	Qty
Between PCB and S2,S3,&S4	1411-40004-300	Switch,Spacer,Molded,EP	1
	1700-50566-200	Bd,Pc,Cont,GPH	1
P11,P12,P13	2105-20031-703	Conn,Hdr,Rt_Angle,3_Pin	3
Between Top frame and switches S2, S3, and S4	2800-20027-400	Spacer,Switch	3
2 lengths .48"ea / Insulate leads of CR1	3101-00000-018	Tubing,Clear,Teflon,22GA	.08FT
CR1	4810-20009-302	Di,LED,Yel,MV5374C	1
S1 (505-662 Rev. A)	5111-10690-500	Switch Rotary,16Channel	1
S1 (505-662 Rev. B)	5111-30942-500	Switch, Rotary 16 pos, HEX, ELMA BV17227	1
S2,S3,S4	5114-20004-300	Switch,Toggle,AS244,W15mm-Lev,	3

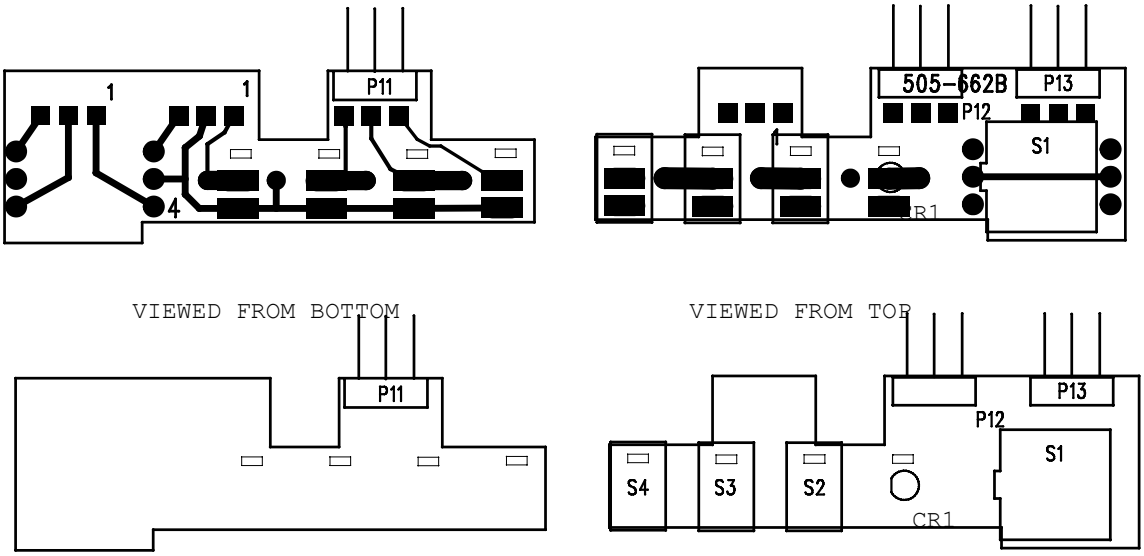
1
1
P11
4
505-662B
P13
P12
S1
CR1
VIEWED FROM BOTTOM
VIEWED FROM TOP
P11
P13
P12
S1
S4
S3
S2
CR1

505-662 Rev. C

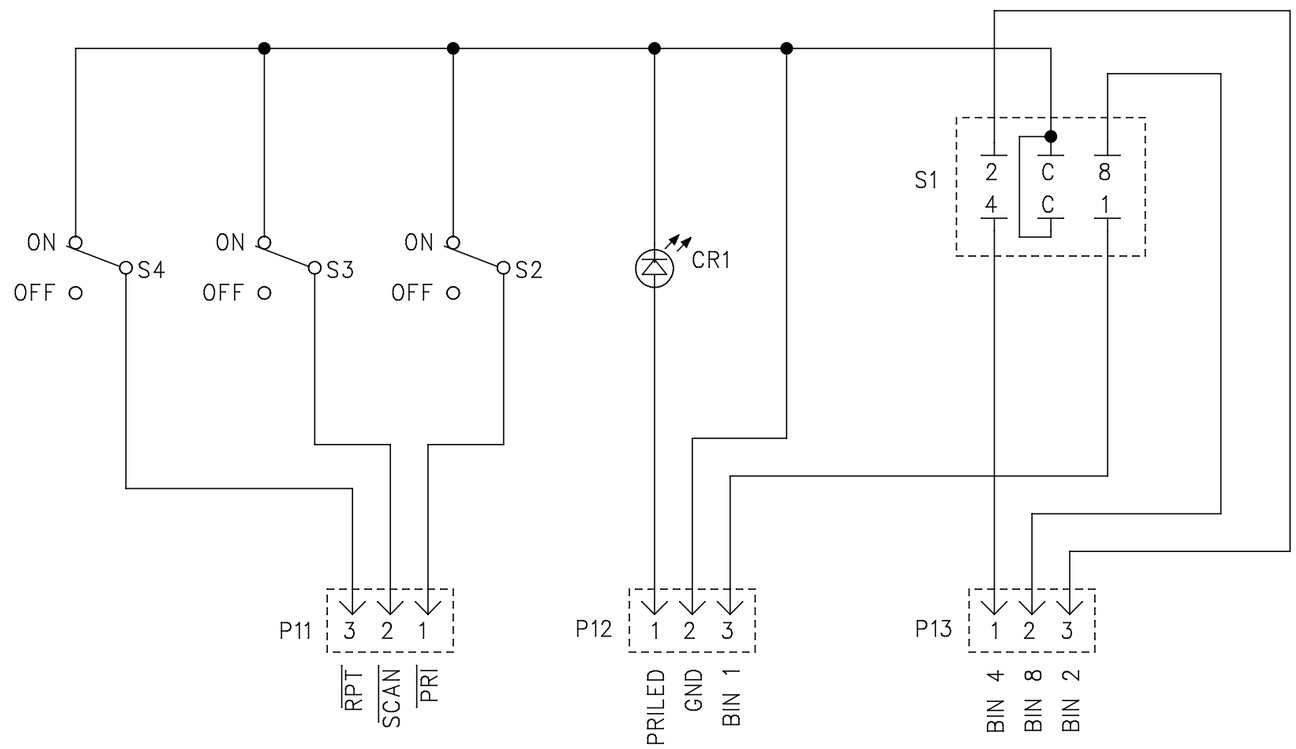

NOTES:

1. BIN = BINARY.

S1 SWITCH POSITION

CODE	1	2	3	4	5	6	7	8	9	10	11	12	13	14	15	16
1	*		*		*		*		*		*		*		*	
2	*	*			*	*			*	*			*	*		
4	*	*	*	*					*	*	*	*				
8	*	*	*	*	*	*	*	*								

* = CONNECTION TO GND

REV.	CHANGE	DATE
B	BY-503	04 27 01

THIS DRAWING IS PROPERTY OF RELM AND SHALL NOT BE REPRODUCED, COPIED OR USED AS THE BASIS FOR THE MANUFACTURE OR SALE OF PRODUCTS WITHOUT PERMISSION.

REFERENCE

RELM COMMUNICATIONS INC.
WEST MELBOURNE, FL. 32904

UNLESS OTHERWISE SPECIFIED
DEC. ± FRACT. ± ANGLES ±
SCREW THREADS – AMERICAN NATIONAL CLASS

SCALE | DRAWN | CHECKED

TITLE GPH CONTROL BOARD SCHEMATIC

3333-50566-200 REV. B

Table 6-4 Replacement Parts, System Board 5W (309-553 Rev. A)

Item Reference Number	Part Number	Description
ITM1	1700-30955-300	PCB SYSTEM BOARD
ITM2	1601-20000-901	Tape,Foam,1/2"Wx1/16"thk.
ITM3	1601-20000-902	Tape,Foam,1/2WX3/64TH
ITM4	2500-20061-300	Core,Threaded,
C1	1570-03102-271	Cap,CP,1000pf,10%,X7R,10V,0402
C2	1570-03103-261	Cap,Cp,.01uF,5%,X7R,16V,0402
C3	1570-01103-283	Cap,Cp,.01uF,20%,X7R,50V,0805
C4	1570-03181-162	Cp,Cap,180 PF,NPO,5%,0402
C5	1570-03151-162	Cp,Cap,150 PF,NPO,5%,0402
C6	1570-00104-261	Cap,Cp,0.1UF,5%,X7R,16V,0603
C8	1553-50313-529	Cap,Cp,220PF,10%,X7R,50V.0805,
C9	1553-50237-780	Cap,Cp,.1UF,5%,X7R,50V,1206,
C10	1553-50237-780	Cap,Cp,.1UF,5%,X7R,50V,1206
C11	1553-50313-529	Cap,Cp,220PF,10%,X7R,50V.0805,
C12	1553-50313-582	Cap,Cp,1000PF,5%,NPO,50V,0805,
C13	1553-50313-508	Cap,Cp,5.6PF,NPO,50V,0805,
C14	1553-50237-733	Cap,Cp,1000PF,10%,X7R,50V,0805,
C15	1553-50237-721	Cap,Cp,6.8PF,+-.25PF,NPO,50V,0805,
C16	1553-50313-584	Cap,Cp,2.4PF,+-.25PF,NPO,50V,0805,
C17	1553-50313-582	Cap,Cp,1000PF,5%,NPO,50V,0805,
C18	1553-50237-733	Cap,Cp,1000PF,10%,X7R,50V,0805,
C19	1552-60463-121	Cap,Cp_Tant,1UF,20%,16V,80D,3216,
C20	1553-20054-600	Cap,Cp,.039UF,5%,X7R,50V,1206,
C21	1541-20065-000	Cap,Pc,0.18Uf,50V10
C22	1553-50313-552	Cap,Cp,10PF,5%,NPO,50V,0805,
C23	1553-50237-788	Cap,Cp,1PF,5%,NPO,50V,0805,
C24	1553-50313-582	Cap,Cp,1000PF,5%,NPO,50V,0805,
C25	1553-50313-582	Cap,Cp,1000PF,5%,NPO,50V,0805,
C26	1553-50313-556	Cap,Cp,1.5PF,+-.25PF,NPO,50V,0805,
C27	1553-50313-582	Cap,Cp,1000PF,5%,NPO,50V,0805,
C28	1553-50313-582	Cap,Cp,1000PF,5%,NPO,50V,0805,
C29	1553-50237-767	Cap,Cp,56PF,5%,NPO,50V,0805,
C30	1553-50237-797	Cap,Cp,6800PF,5%,X7R,50V,0805,
C31	1553-50237-788	Cap,Cp,1PF,5%,NPO,50V,0805,
C32	1553-50313-529	Cap,Cp,220PF,10%,X7R,50V.0805,
C33	1552-60463-131	Cap,Cp_Tant,2.2UF,20%,20V,125D,3528,
C34	1553-50313-582	Cap,Cp,1000PF,5%,NPO,50V,0805,
C35	1553-50313-529	Cap,Cp,220PF,10%,X7R,50V.0805,
C36	1553-50237-782	Cap,Cp,.047UF,5%,X7R,50V,1206,
C37	1553-50237-736	Cap,cd,1800PF,X7R,50v,10%
C38	1513-30790-820	Cap,E,220UF,+-20%,16V,85D,6.3X11mm,
C39	1553-50237-780	Cap,Cp,.1UF,5%,X7R,50V,1206
C40	1553-50237-780	Cap,Cp,.1UF,5%,X7R,50V,1206
C41	1553-50237-780	Cap,Cp,.1UF,5%,X7R,50V,1206,
C42	1553-50313-583	Cap,Cp,470PF,5%,NPO,50V,0805,
C43	1552-60463-121	Cap,Cp_Tant,1UF,20%,16V,80D,3216,
C44	1553-50237-763	Cap,cd,1800PF,X7R,50v,10%
C45	1553-50237-763	Cap,cd,1800PF,X7R,50v,10%
C46	1552-60463-121	Cap,Cp_Tant,1UF,20%,16V,80D,3216,
C47	1553-50237-780	Cap,Cp,.1UF,5%,X7R,50V,1206,
C48	1553-50237-733	Cap,Cp,1000PF,10%,X7R,50V,0805,

Item Reference Number	Part Number	Description
C49	1552-60463-113	Cap,Cp_Tant,10UF,20%,16V,80D,6032,
C50	1553-50237-733	Cap,Cp,1000PF,10%,X7R,50V,0805,
C51	1553-50313-531	Cap,Cp,100PF,5%,NPO,50V,0805,
C52	1570-02272-163	Cap,CP,2700pF,5%,NPO,50V,1206,
C53	1552-60463-129	Cap,Cp_Tant,2.2UF,20%,6V,125D,3216,
C54	1570-03102-271	Cap,CP,1000pf,10%,X7R,10V,0402
C55	1553-50313-529	Cap,Cp,220PF,10%,X7R,50V.0805,
C56	1553-50313-582	Cap,Cp,1000PF,5%,NPO,50V,0805,
C57	1553-50313-582	Cap,Cp,1000PF,5%,NPO,50V,0805,
C58	1570-03102-271	Cap,CP,1000pf,10%,X7R,10V,0402
C59	1570-03103-261	Cap,Cp,.01uF,5%,X7R,16V,0402
C60	1553-50313-582	Cap,Cp,1000PF,5%,NPO,50V,0805,
C61	1553-50237-780	Cap,Cp,.1UF,5%,X7R,50V,1206,
C62	1553-50237-733	Cap,Cp,1000PF,10%,X7R,50V,0805,
C64	1570-03102-271	Cap,CP,1000pf,10%,X7R,10V,0402
C65	1553-50313-582	Cap,Cp,1000PF,5%,NPO,50V,0805,
C66	1553-50313-582	Cap,Cp,1000PF,5%,NPO,50V,0805,
C67	1553-50313-582	Cap,Cp,1000PF,5%,NPO,50V,0805,
C68	1570-03102-271	Cap,CP,1000pf,10%,X7R,10V,0402
C69	1552-60463-121	Cap,Cp_Tant,1UF,20%,16V,80D,3216,
C70	1553-50313-526	Cap,CP,.033UF,5X7R,25V,0805
C71	1553-50237-734	Cap,Cp,.01UF,10%,X7R,50V,0805
C72	1570-03103-261	Cap,Cp,.01uF,5%,X7R,16V,0402
C73	1570-03102-271	Cap,CP,1000pf,10%,X7R,10V,0402
C74	1570-03102-271	Cap,CP,1000pf,10%,X7R,10V,0402
C75	1513-30254-778	Cap,E,470UF,+30-20%,16V,85D,10X12.5mm,
C76	1553-50313-583	Cap,Cp,470PF,5%,NPO,50V,0805,
C77	1570-03102-271	Cap,CP,1000pf,10%,X7R,10V,0402
C78	1553-50237-734	Cap,Cp,.01UF,10%,X7R,50V,0805,
C80	1553-50313-531	Cap,Cp,100PF,5%,NPO,50V,0805,
C81	1570-03102-271	Cap,CP,1000pf,10%,X7R,10V,0402
C82	1570-03102-271	Cap,CP,1000pf,10%,X7R,10V,0402
C83	1570-03103-261	Cap,Cp,.01uF,5%,X7R,16V,0402
C84	1570-03102-271	Cap,CP,1000pf,10%,X7R,10V,0402
C85	1570-03102-271	Cap,CP,1000pf,10%,X7R,10V,0402
C86	1570-03103-261	Cap,Cp,.01uF,5%,X7R,16V,0402
C87	1570-03103-261	Cap,Cp,.01uF,5%,X7R,16V,0402
C88	1570-03102-271	Cap,CP,1000pf,10%,X7R,10V,0402
C93	1570-03102-271	Cap,CP,1000pf,10%,X7R,10V,0402
C94	1570-03102-271	Cap,CP,1000pf,10%,X7R,10V,0402
C95	1570-03102-271	Cap,CP,1000pf,10%,X7R,10V,0402
C96	1570-03102-271	Cap,CP,1000pf,10%,X7R,10V,0402
CJ2	4724-00000-009	Res,Cp,0_Ohm,0.1W,2A_Max0805
J7	2105-20017-606	Conn,Box_Strip,
J8	2105-20017-606	Conn,Box_Strip,
CR2	4824-20021-200	Di,Var-Dual,MMBV432,SOT-23,
CR3	4824-50483-300	Di,Pin,MMBV3401,SOT-23,
CR4	4824-30575-401	Di,Var,BB535,SOD.323
CR5	4824-20021-100	Di,Var,MMBV105,SOT-23,
CR6	4824-20008-500	Di,Sil,Switching-Dual,MMBD7000,SOT-23,
CR7	4810-20009-303	Di,LED,Red,MV5774C

Item Reference Number	Part Number	Description
CR8	4824-20008-500	Di,Sil,Switching-Dual,MMBD7000,SOT-23,
FB1	2503-20022-300	Ferrite,Bead,Surfc,Mt
FB2	2503-20022-300	Ferrite,Bead,Surfc,Mt
FB3	2503-02102-410	Bead,Ferrite,1K_Ohm,100MHz,0.1A,0603
FB4	2503-02102-410	Bead,Ferrite,1K_Ohm,100MHz,0.1A,0603
FB5	2503-02102-410	Bead,Ferrite,1K_Ohm,100MHz,0.1A,0603
FB6	2503-02102-410	Bead,Ferrite,1K_Ohm,100MHz,0.1A,0603
FB7	2503-02102-410	Bead,Ferrite,1K_Ohm,100MHz,0.1A,0603
FB8	2503-02102-410	Bead,Ferrite,1K_Ohm,100MHz,0.1A,0603
FB10	2503-02102-410	Bead,Ferrite,1K_Ohm,100MHz,0.1A,0603
L1	1808-20013-617	Ind,Fxd_Coil,220NH@25MHz,Q=28,SMD
L2	1808-20013-614	Ind,Fxd_Coil,120NH@25MHz,Q=25,SMD
L3	1808-20013-618	Ind,Fxd_Coil,270NH@25MHz,Q=28,SMD
L4	1808-20013-619	Ind,Fxd_Coil,330NH@250MHz,Q=30,SMD
L5	1808-20013-628	Ind,Fxd_Coil,1000NH@25MHz,Q=38,SMD
L6	1808-20013-628	Ind,Fxd_Coil,1000NH@25MHz,Q=38,SMD
P1	2105-20035-821	Conn,Hdr,3_Pin,
P2	2105-20035-705	Conn.Square,5_Pin,.025Sq
Q1	4823-20046-700	Xstr,PMosfet,Sm_Sig,TP0610,SOT23
Q2	4823-10367-900	Xstr,NPN,RF_Sm_Sig,MMBTH10,SOT23,
Q3	4823-30562-201	Xstr,RF,BRF92A
Q4	4823-10367-900	Xstr,NPN,RF_Sm_Sig,MMBTH10,SOT23,
Q5	4823-30741-401	Xstr,NPN,Rf_Sm_Sig,MMBT5089,SOT-23,
Q6	4823-20046-700	Xstr,PMosfet,Sm_Sig,TP0610,SOT23
Q7	4823-20046-700	Xstr,PMosfet,Sm_Sig,TP0610,SOT23
Q8	4823-20046-700	Xstr,PMosfet,Sm_Sig,TP0610,SOT23
Q9	4823-30680-020	Xstr,NPN,W/Bias,4.7K/10K,SOT-23,
Q10	4823-30669-001	Xstr,PNP,Sm_Sig,MMBT3906,SOT23,
Q11	4823-30680-002	Xstr,NPN,W/Bias,47K/47K,SOT-23,
Q12	4823-30680-002	Xstr,NPN,W/Bias,47K/47K,SOT-23
Q13	4823-20046-700	Xstr,PMosfet,Sm_Sig,TP0610,SOT23
Q14	4823-30680-018	Xstr,NPN,W/Bias,47K,SOT-23
Q15	4823-30939-201	Trans, MOSFET, N-Channel, SC-70, 2SK3018
Q16	4823-30680-002	Xstr,NPN,W/Bias,47K/47K,SOT-23,
Q17	4823-30680-002	Xstr,NPN,W/Bias,47K/47K,SOT-23
Q18	4823-30680-010	Xstr,PNP,W/Bias,10K/10K,SOT-23,
Q19	4823-30680-020	Xstr,NPN,W/Bias,4.7K/10K,SOT-23,
Q20	4823-30680-002	Xstr,NPN,W/Bias,47K/47K,SOT-23,
Q21	4823-50483-200	Xstr,NJFET,Rf_Sm_Sig,MMBFU310,SOT-23,
Q22	4823-20020-400	Xstr,NPN,Rf_Sm_Sig,MMBR901,SOT23,
R1	4724-00103-233	Res,Cp,10K,1/10W,5%,0805
R2	4734-03323-311	Res,Cp,332K,1%,1/16W,0402
R3	4734-01001-311	Res,CP,1.00K,1%,1/16W,0402
R4	4734-01001-311	Res,CP,1.00K,1%,1/16W,0402
R5	4734-01001-311	Res,CP,1.00K,1%,1/16W,0402
R6	4734-01001-311	Res,CP,1.00K,1%,1/16W,0402
R7	4734-01001-311	Res,CP,1.00K,1%,1/16W,0402
R8	4734-01000-311	Res,Cp,100_Ohm,1%, 1/16W,0402
R9	4734-01001-311	Res,CP,1.00K,1%,1/16W,0402

Item Reference Number	Part Number	Description
R10	4724-00104-233	Res,Cp,100K_Ohm,1/10W,5%,0805
R11	4734-01001-311	Res,CP,1.00K,1%,1/16W,0402
R12	4724-00100-233	Res,Cp,10_Ohm,1/10W,5%,0805,
R13	4724-00472-233	Res,Cp,4700_Ohm,1/10W,5%,0805,
R14	4724-00104-233	Res,Cp,100K_Ohm,1/10W,5%,0805
R15	4724-26192-113	Res,Film,61.9k-Ohm,0.1W,1%,0805
R16	4724-21003-113	Res,Film,100k-Ohm,0.1w,1%,0805
R17	4724-22742-113	Res,Film,27.4k-Ohm,0.1W,1%,0805
R18	4724-21003-113	Res,Film,100k-Ohm,0.1w,1%,0805
R19	4724-22742-113	Res,Film,27.4k-Ohm,0.1W,1%,0805
R20	4724-00682-233	Res,Cp,6800_Ohm,1/10W,5%,0805,
R21	4724-00102-233	Res,Cp,1000_Ohm,1/10W,5%,0805,
R22	4724-00102-233	Res,Cp,1000_Ohm,1/10W,5%,0805,
R23	4724-00753-233	Res,Cp,75K_Ohm,1/10W,5%
R24	4724-00473-233	Res,Cp,47K_Ohm,1/10W,5%,0805,
R25	4724-00824-233	Res,CP,820K_OHM,1/10w,5%,
R26	4724-00164-233	Res,Cp,160K_Ohm,1/10W,5%,0805,
R27	4724-00563-233	RES,CP,56K,1/10W5
R28	4724-00163-233	Res,Cp,16K_Ohm,1/10W,5%,0805,
R29	4724-00151-233	Res,Cp,150_Ohm,1/10W,5%,0805,
R30	4724-00101-233	Res,Cp,100_Ohm,1/10W,5%,0805,
R31	4724-00103-233	Res,Cp,10K,1/10W,5%,0805,
R32	4724-00302-233	Res,Cp,3K_Ohm,1/10W,5%,0805,
R33	4724-00112-233	Res,Cp,1100_Ohm,1/10W,5%,0805,
R34	4724-00200-233	Res,Cp,20_Ohm,1/10W,5%,0805,
R35	4724-00101-233	Res,Cp,100_Ohm,1/10W,5%,0805,
R36	4724-00302-233	Res,Cp,3K_Ohm,1/10W,5%,0805,
R37	4724-00513-233	Res,Cp,51K_Ohm,1/10W,5%,0805,
R38	4724-00363-233	Res,Cp,36K_Ohm,1/10W,5%,0805,
R39	4724-00153-233	Res,Cp,15K_Ohm,1/10W,5%,0805,
R40	4734-01001-311	Res,CP,1.00K,1%,1/16W,0402
R41	4734-01001-311	Res,CP,1.00K,1%,1/16W,0402
R42	4724-00143-233	Res,Cp,14K,1%,1/10W,0805
R43	4734-01001-311	Res,CP,1.00K,1%,1/16W,0402
R44	4734-01001-311	Res,CP,1.00K,1%,1/16W,0402
R45	4734-01001-311	Res,CP,1.00K,1%,1/16W,0402
R46	4734-01001-311	Res,CP,1.00K,1%,1/16W,0402
R47	4734-01001-311	Res,CP,1.00K,1%,1/16W,0402
R48	4724-00474-233	Res,Cp,470K_Ohm,1/10W,5%,0805,
R49	4724-00514-233	Res,Cp,510K_Ohm,1/10W,5%,0805
R50	4724-00243-233	Res,Cp,24K_Ohm,1/10W,5%,0805
R51	4750-20003-903	Res,Var,10K_Ohm,Linear_Taper,Panel
R52	4724-04752-113	Res,Cp,47.5K_Ohm,1/10W,1%,0805
R53	4724-02373-113	Res,Cp,237K_Ohm,1/10W,1%,
R54	4724-00105-223	Res,Cp,1M_Ohm,1/10W,2%,0805,
R55	4724-00913-233	Res,Cp,91K_Ohm,1/10W,5%
R56	4724-00243-233	Res,Cp,24K_Ohm,1/10W,5%,0805,
R57	4724-00683-233	Res,Cp,68K_Ohm,1/10W,5%,0805,
R58	4734-02261-311	Res,Cp,2.26K,1%,1/16W,0402
R59	4734-02002-311	Res,Cp,20K,1%,1/16W,0402
R60	4724-36192-913	Res,Film,61.9k-Ohm,1%,0805
R61	4724-36192-913	Res,Film,61.9k-Ohm,1%,0805
R62	4724-03322-113	Res,Cp,33.2K_Ohm,1/10W,1%,
R63	4724-00513-223	Res,Cp,51K_Ohm,1/10W,2%,0805

Item Reference Number	Part Number	Description
R64	4734-01004-311	Res,Cp,1M,1%,1/16W,0402
R65	4734-01002-311	Res,CP,10K,1%,1/16W,0402
R66	4734-03921-311	Res,CP,3.92K,1%,1/16W,0402
R67	4734-08252-311	Res,CP,82.5K,1%,1/16W,0402
R68	4734-04322-311	Res,CP,43.2K,1%,1/16W,0402
R69	4734-01001-311	Res,CP,1.00K,1%,1/16W,0402
R70	4724-00473-233	Res,Cp,47K_Ohm,1/10W,5%,0805
R71	4724-00473-233	Res,Cp,47K_Ohm,1/10W,5%,0805
R72	4724-00202-233	Res,Cp,2000_Ohm,1/10W,5%,0805,
R73	4734-04700-311	Res,Cp,470_Ohm,1%,1/16W,0402
R74	4724-00104-233	Res,Cp,100K_Ohm,1/10W,5%,0805
R75	4724-00682-233	Res,Cp,6800_Ohm,1/10W,5%,0805,
R76	4724-00103-233	Res,Cp,10K,1/10W,5%,0805,
R77	4724-00104-233	Res,Cp,100K_Ohm,1/10W,5%,0805
R78	4734-01001-311	Res,CP,1.00K,1%,1/16W,0402
R79	4734-01001-311	Res,CP,1.00K,1%,1/16W,0402
R80	4724-00823-233	Res,Cp,82K_Ohm,1/10W,5%
R81	4724-00132-233	Res,cp,1300_Ohm,1/10W,5%
R82	4734-01005-331	Res,Cp,10M,1/16W,5%,0402
R83	4724-00335-233	Res,Cp,3.3M_Ohm,1/10W,5%,0805,
R84	4724-00203-233	Res,Cp,20K_Ohm,1/10W,5%,0805,
R85	4750-20003-904	Res,Var,100K_Ohm,Audio_Taper,Panel
R86	4724-00100-233	Res,Cp,10_Ohm,1/10W,5%,0805,
R87	4734-01004-311	Res,Cp,1M,1%,1/16W,0402
R88	4734-01001-311	Res,CP,1.00K,1%,1/16W,0402
R89	4724-00243-233	Res,Cp,24K_Ohm,1/10W,5%,0805,
R91	4734-01001-311	Res,CP,1.00K,1%,1/16W,0402
R92	4724-00104-233	Res,Cp,100K_Ohm,1/10W,5%,0805
R93	4734-01004-311	Res,Cp,1M,1%,1/16W,0402
R94	4724-00335-233	Res,Cp,3.3M_Ohm,1/10W,5%,0805,
R95	4724-00514-233	Res,Cp,510K_Ohm,1/10W,5%,0805
R96	4734-01001-311	Res,CP,1.00K,1%,1/16W,0402
R97	4724-00332-233	Res,Cp,3300_Ohm,1/10W,5%,0805,
R98	4734-01001-311	Res,CP,1.00K,1%,1/16W,0402
R103	4724-00102-233	Res,Cp,1000_Ohm,1/10W,5%,0805,
R104	4724-00102-233	Res,Cp,1000_Ohm,1/10W,5%,0805,
R105	4724-00102-233	Res,Cp,1000_Ohm,1/10W,5%,0805,
R106	4724-00102-233	Res,Cp,1000_Ohm,1/10W,5%,0805,
R107	4724-00102-233	Res,Cp,1000_Ohm,1/10W,5%,0805,
R108	4724-00102-233	Res,Cp,1000_Ohm,1/10W,5%,0805,
R111	4718-50317-140	Res,Cp,0_Ohm,1/8W,5%,1206,
R112	4734-04992-311	Res,Cp,49.9K,1%,1/16W,0402
R113	4734-01003-311	Res,CP,100K,1%,1/16W,0402
R114	4734-02003-311	Res,Cp,200K,1%,1/16W,0402
R116	4734-04992-311	Res,Cp,49.9K,1%,1/16W,0402
R117	4734-02492-311	Res,Cp,24.9K,1%,1/16W,0402
R118	4734-01003-311	Res,CP,100K,1%,1/16W,0402
R119	4734-01001-311	Res,CP,1.00K,1%,1/16W,0402
R120	4734-01001-311	Res,CP,1.00K,1%,1/16W,0402
R121	4734-01001-311	Res,CP,1.00K,1%,1/16W,0402
R122	4734-01003-311	Res,CP,100K,1%,1/16W,0402
R123	4734-03092-311	Res,Cp,30.9K,1%,1/16W,0402
R124	4734-01372-311	Res,Cp,13.7K,1%,1/16W,0402
R128	4724-00103-233	Res,Cp,10K,1/10W,5%,0805,

Item Reference Number	Part Number	Description
R129	4724-00102-233	Res,Cp,1000_Ohm,1/10W,5%,0805,
R130	4724-00101-233	Res,Cp,100_Ohm,1/10W,5%,0805,
R131	4724-00101-233	Res,Cp,100_Ohm,1/10W,5%,0805,
R132	4724-00823-233	Res,Cp,82K_Ohm,1/10W,5%
R138	4724-36192-913	Res,Film,61.9k-Ohm,1%,0805
R139	4724-39532-913	Res,Film,95.3k_Ohm,1%,0805
R141	4724-00101-233	Res,Cp,100_Ohm,1/10W,5%,0805
T1	1800-20012-701	Ind,RF_Xfmr,P_3.1/4T,S_11/4T,100MHz,Can
U1	3134-30918-001	IC,MCU,Flash Blank,MC68HC908GP32CFB,QFP
U2	3134-30940-800	IC, Quad. DAC, TLV5604IPW, TSSOP-14
U3	3134-20040-200	Ic,OPA,LMC660,SO14
U4	3134-20061-600	Ic,OPA,TLC27L4,SO14
U6	3134-20010-100	Ic,LVS,14504,SO16,
U7	3134-30747-819	IC,EEPROM,24LC256-I/SN,256K,2.5V,SO8
U8	3134-30670-403	IC,RGA,LP2951CM,SO8
U9	3134-30927-201	IC,BTL_Audio_Amp.,1W,TDA8541T
U11	3134-30670-417	IC,PRS,MC12016D,S08
U12	3134-30577-401	Ic,Freq,Syn,MC145159VF
U13	3134-30670-505	IC,BAS,MC14066BD,SO14
U14	3134-30670-505	IC,BAS,MC14066BD,SO14
U15	3134-20061-500	Ic,OPA,NE5230,SO8
U18	3134-10690-100	IC,DS1868E-10
U19	3134-30670-426	IC,Prog.Digital Thermostat,DS1821S
Y1	2338-20061-103	Crystal,10.00Mhz,Quartz,Black w/data
Y2	2384-30918-101	Xtal,MP,32.768kHz,SMD

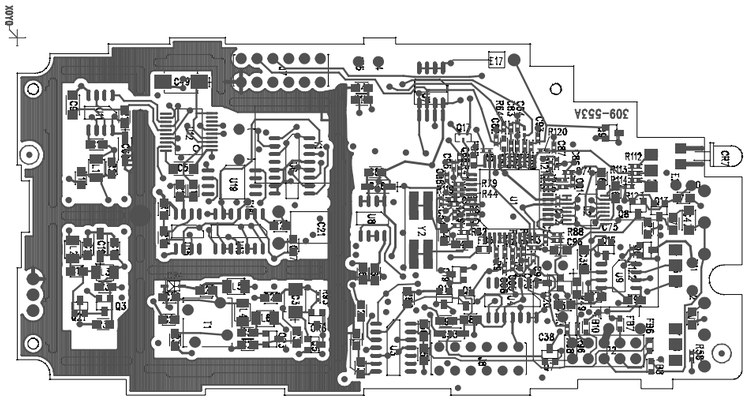

TOP SIDE (VIEWED FROM TOP)

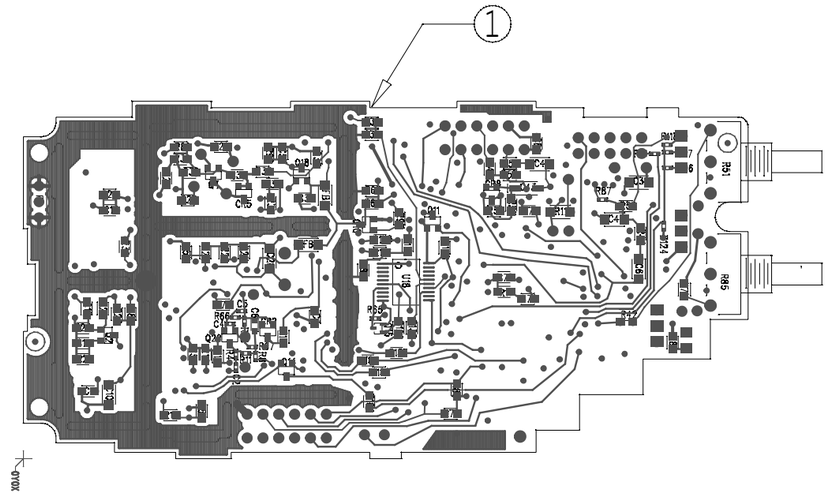

BOTTOM SIDE (VIEWED FROM BOTTOM)

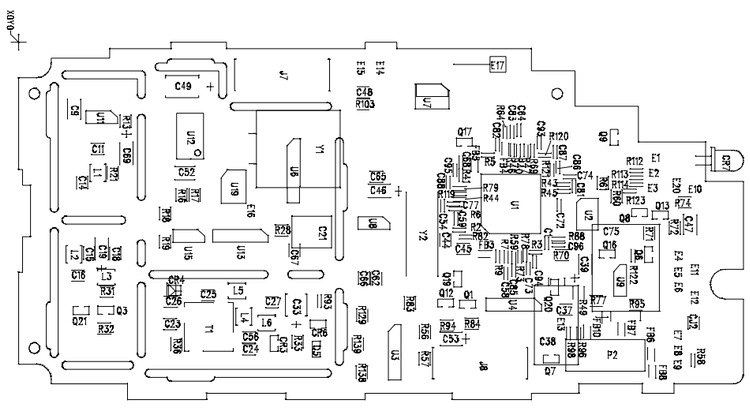

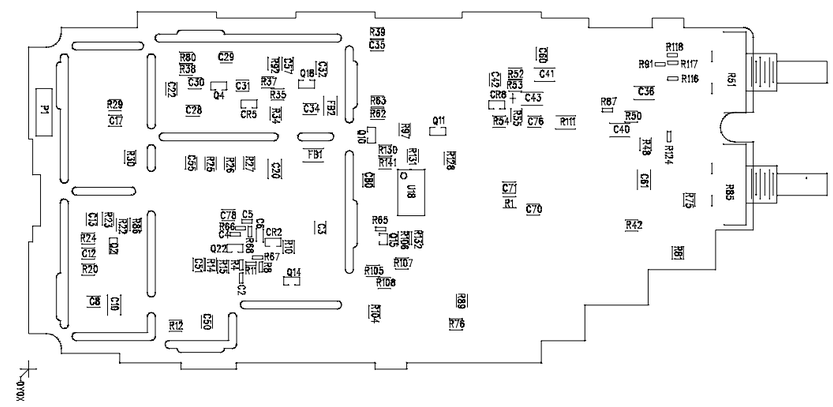

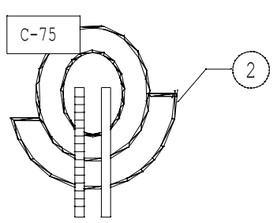

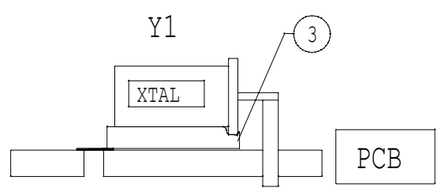

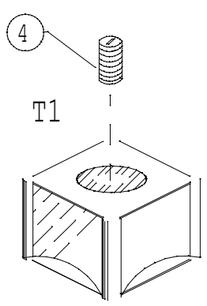

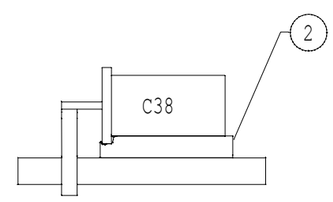

Figure 6-7 System Board (309-553 Rev. A)
(Dwg. No. 8888-30955-300 Rev. A)

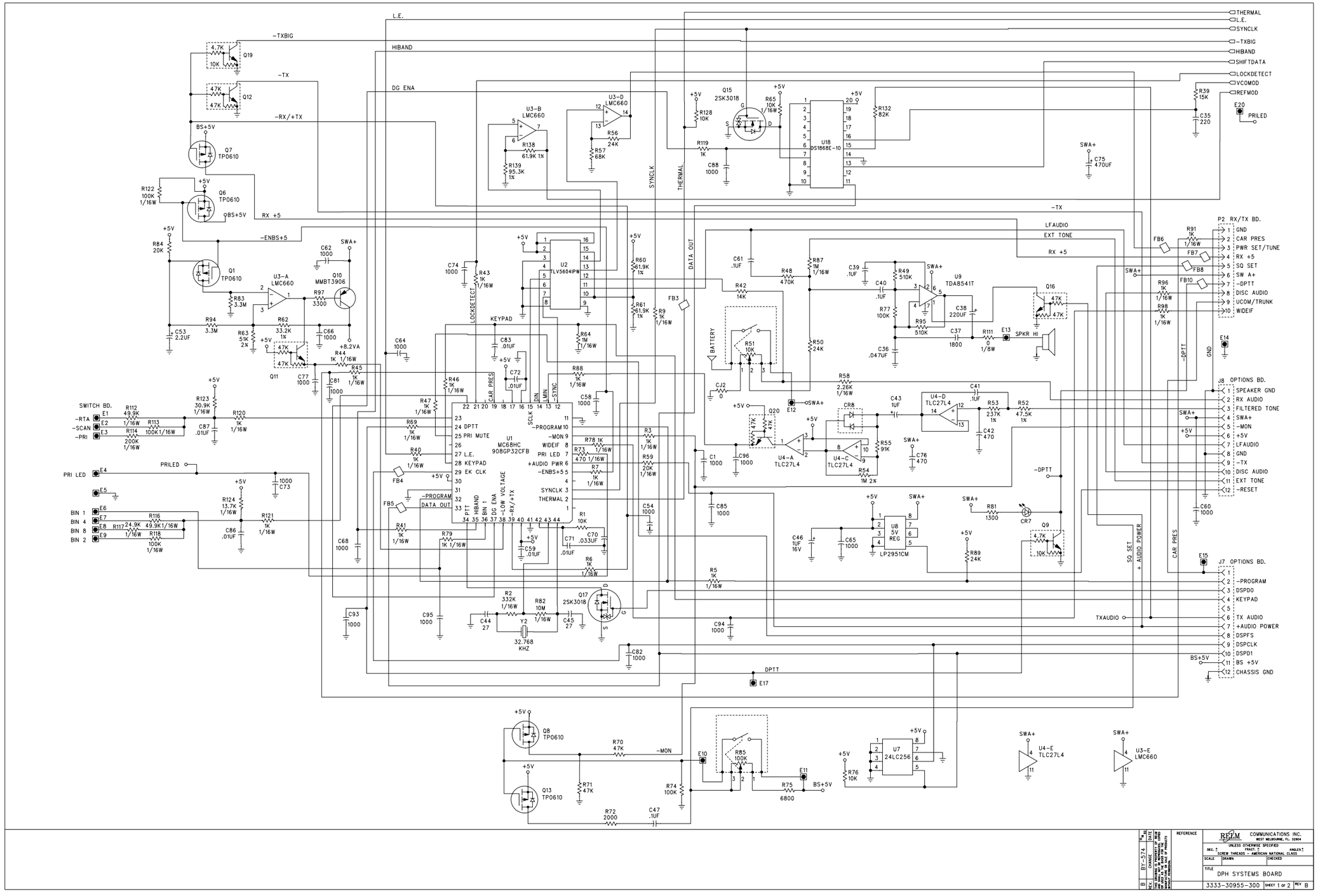
THERMAL
L.E.
SYNCLK
-TXBIG
HIBAND
SHIFTDATA
LOCKDETECT
VCOMOD
REFMOD
PRILED
-TX
DG ENA
-RX/+TX
BS+5V
RX +5
-ENBS+5
LFAUDIO
EXT TONE
SWA+
KEYPAD
DATA OUT
BATTERY
SPKR HI
SWITCH BD.
-RTA
-SCAN
-PRI
PRI LED
BIN 1
BIN 4
BIN 8
BIN 2
-PROGRAM
DATA OUT
PRI MUTE
L.E.
EK CLK
WIDEIF
PRI LED
+AUDIO PWR
-ENBS+5
SYNCLK
THERMAL
-MON
32.768 KHZ
DPTT
TXAUDIO
P2 RX/TX BD.
GND
CAR PRES
PWR SET/TUNE
RX +5
SQ SET
SW A+
-DPTT
DISC AUDIO
UCOM/TRUNK
WIDEIF
J8 OPTIONS BD.
SPEAKER GND
RX AUDIO
FILTERED TONE
SWA+
-MON
+5V
LFAUDIO
GND
-TX
DISC AUDIO
EXT TONE
-RESET
J7 OPTIONS BD.
-PROGRAM
DSPDO
KEYPAD
TX AUDIO
+AUDIO POWER
DSPFS
DSPCLK
DSPD1
BS +5V
CHASSIS GND
SQ SET
+ AUDIO POWER
CAR PRES
-DPTT
U1 MC68HC 908GP32CFB
U2 TLV5604IPW
U3-A LMC660
U3-B LMC660
U3-D LMC660
U3-E LMC660
U4-A TLC27L4
U4-C TLC27L4
U4-D TLC27L4
U4-E TLC27L4
U7 24LC256
U8 5V REG LP2951CM
U9 TDA8541T
U18 DS1868E-10
Q15 2SK3018
Q17 2SK3018
Q16
Q9
Q8 TP0610
Q13 TP0610
Q7 TP0610
Q6 TP0610
Q1 TP0610
Q10 MMBT3906
Q11
Q19
Q12
Q20
CR8
CR7
REFERENCE
REM COMMUNICATIONS INC.
WEST MELBOURNE, FL. 32904
UNLESS OTHERWISE SPECIFIED
DEC. ± FRACT. ± ANGLES ±
SCREW THREADS - AMERICAN NATIONAL CLASS
SCALE DRAWN CHECKED
TITLE
DPH SYSTEMS BOARD
3333-30955-300 SHEET 1 OF 2 REV B
B BK-574 CHANGE

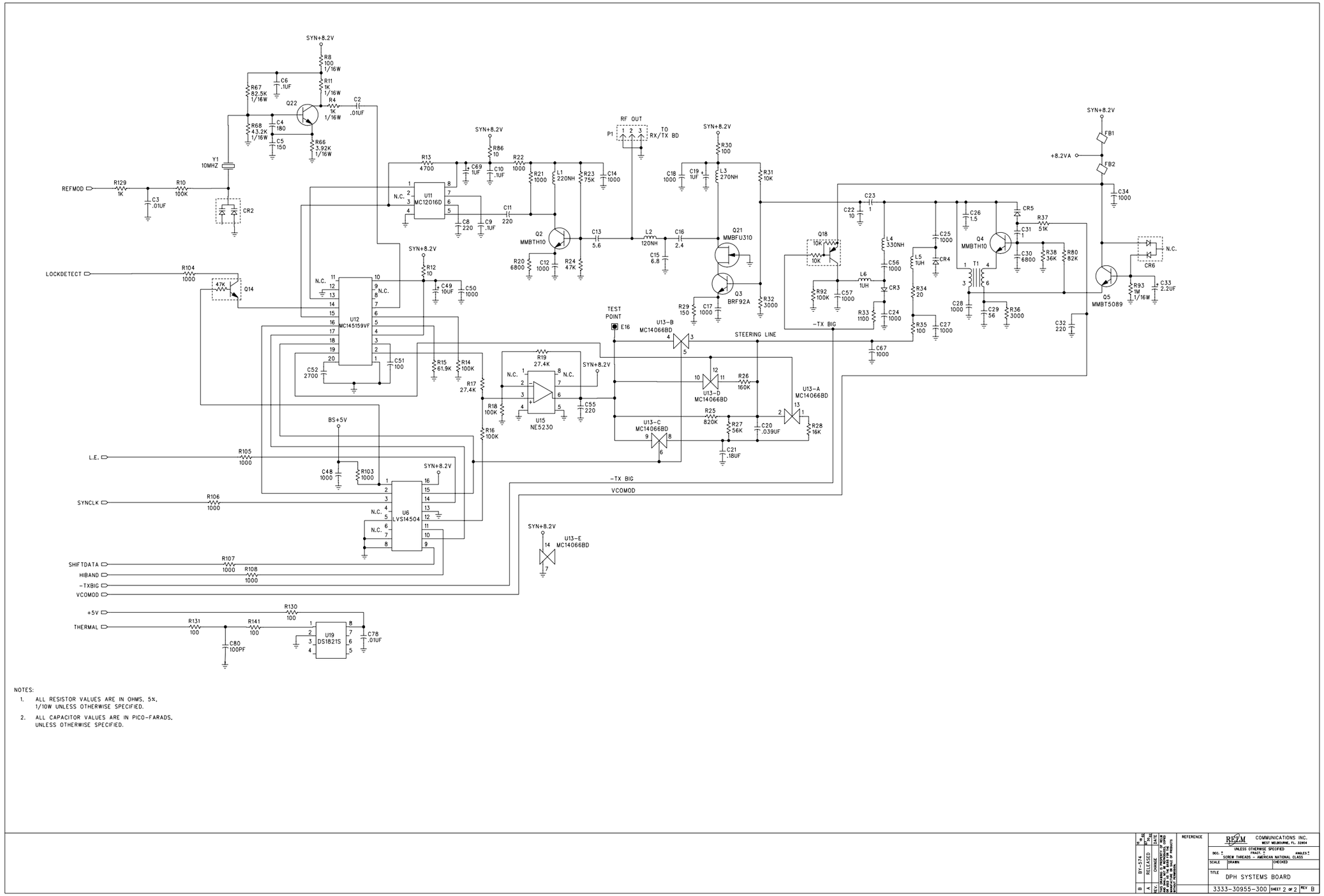

NOTES:

1. ALL RESISTOR VALUES ARE IN OHMS, 5%, 1/10W UNLESS OTHERWISE SPECIFIED.
2. ALL CAPACITOR VALUES ARE IN PICO-FARADS, UNLESS OTHERWISE SPECIFIED.

REV.	CHANGE	DATE	BY
B	RV-574	9-26-97	
A	RELEASED	04-14-97	

THE OWNERSHIP, REPRODUCTION OR DISCLOSURE TO OTHERS OF THIS DRAWING IS PROHIBITED WITHOUT WRITTEN PERMISSION.

REFERENCE

REDM COMMUNICATIONS INC. WEST MELBOURNE, FL. 32904

UNLESS OTHERWISE SPECIFIED
DEC. ± FRACT. ± ANGLES ±
SCREW THREADS - AMERICAN NATIONAL CLASS

SCALE | DRAWN | CHECKED

TITLE DPH SYSTEMS BOARD

3333-30955-300 SHEET 2 OF 2 REV B

Table 6-5 Replacement Parts, Top Frame Assembly

Item Reference Number	Part Number	Description
ITM 1	1700-40011-000	Bd, Pc, PTTSW, EPH/ EPI/EPU/EPV
ITM 2	2883-20035-500	Rivet, .06X.125, Br
ITM 3	3110-20032-600	Snap, Dome, Alignment
ITM 4	5112-40010-900	Switch, Snap, Dome
ITM 5	1411-40005-500	Actuator, PTT, Molded, EP
ITM 6	1411-50703-000	PTT, Sw Boot, Molded, EP
ITM 7	1411-40005-900	Options, Plug-Spacer,Molded, EP
ITM 8	2820-30603-022	Scr,MS, 2X.40X6, T1CR, PH, SS
ITM 9	2858-40007-700	Nut Blind, Press
ITM 11	1411-50702-104	Housing, PTT, GPH
ITM 12	2801-30714-512	Scr, MS, 2-56, X5/16, T1CR, FH100, SS, BLKOX
ITM 13	3110-20032-500	Insulatr, Shim, PTT-HSG
ITM 15	2512-40011-200	Gasket, PTT
ITM 18	1403-50704-302	Chassis, Topframe, w/finish
ITM 19	3101-00000-018	Tubing, Clear, Teflon, 22GA
ITM 20	6024-00000-001	Wire, Buss, 24GA, Tin/Copper
ITM 21	6026-30315-808	Wire, 26GA, StrTef, Purple
ITM 22	6026-30315-806	Wire, Strnd, 26GA, 250V, Grn, Teflon
ITM 23	1411-40006-200	Conn, Side, Cvr, Molded, EP
ITM 24	1503-00103-007	CAP,CD,.01UF,50V,Z5U,
J14	2101-20033-100	Jack, 3.5MM
J15	2101-20033-000	Jack, Phono, 2.5MM
J17	2105-20032-300	Conn, Receptacle
P10	1700-60705-900	Bd,Pc, Flexcir, EPH/EPI/EPU/EPV

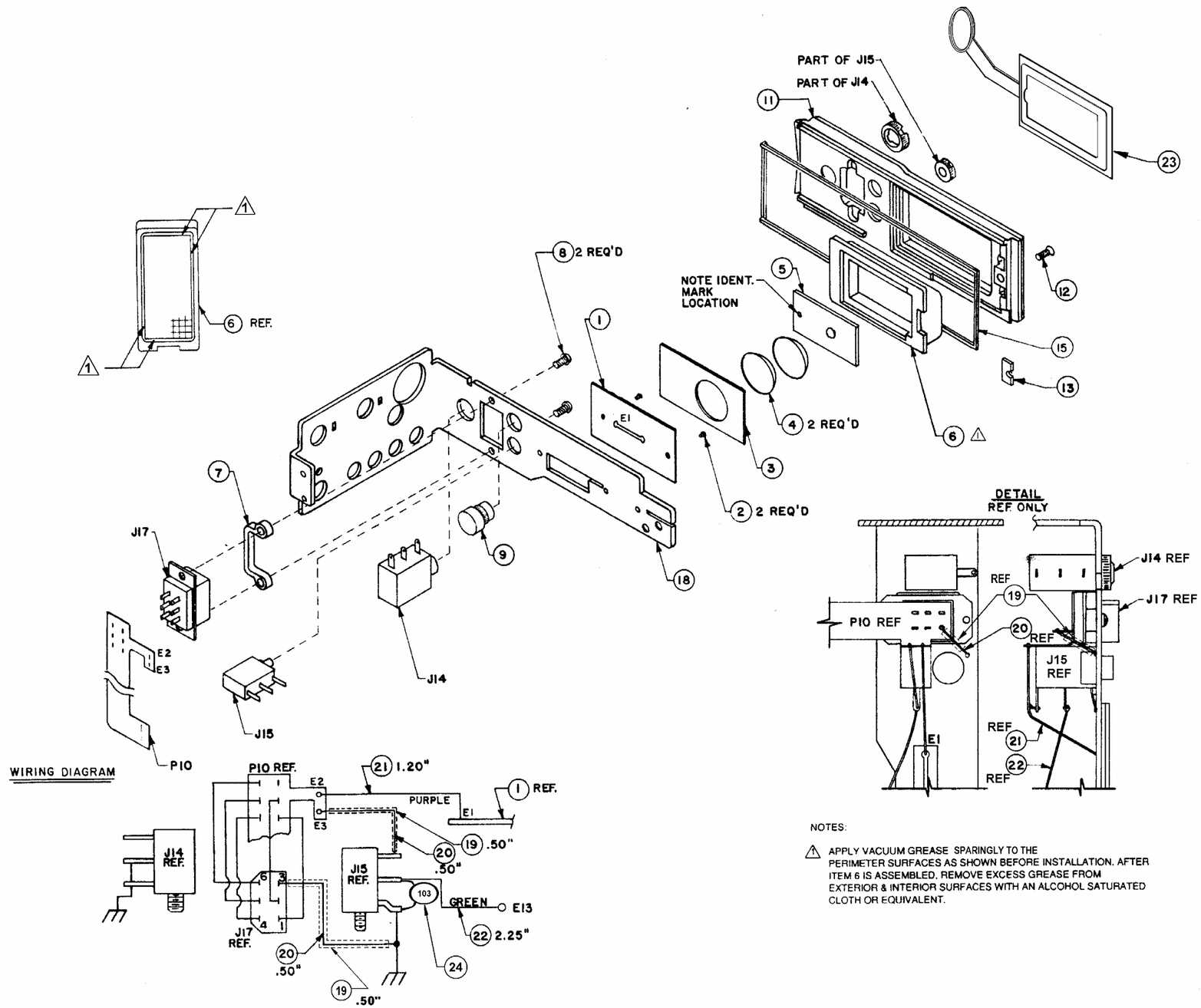

NOTES:

1. APPLY VACUUM GREASE SPARINGLY TO THE PERIMETER SURFACES AS SHOWN BEFORE INSTALLATION. AFTER ITEM 6 IS ASSEMBLED, REMOVE EXCESS GREASE FROM EXTERIOR & INTERIOR SURFACES WITH AN ALCOHOL SATURATED CLOTH OR EQUIVALENT.