REV.	DESCRIPTION	BY	APPROVED	DATE
0	INITIAL RELEASE			

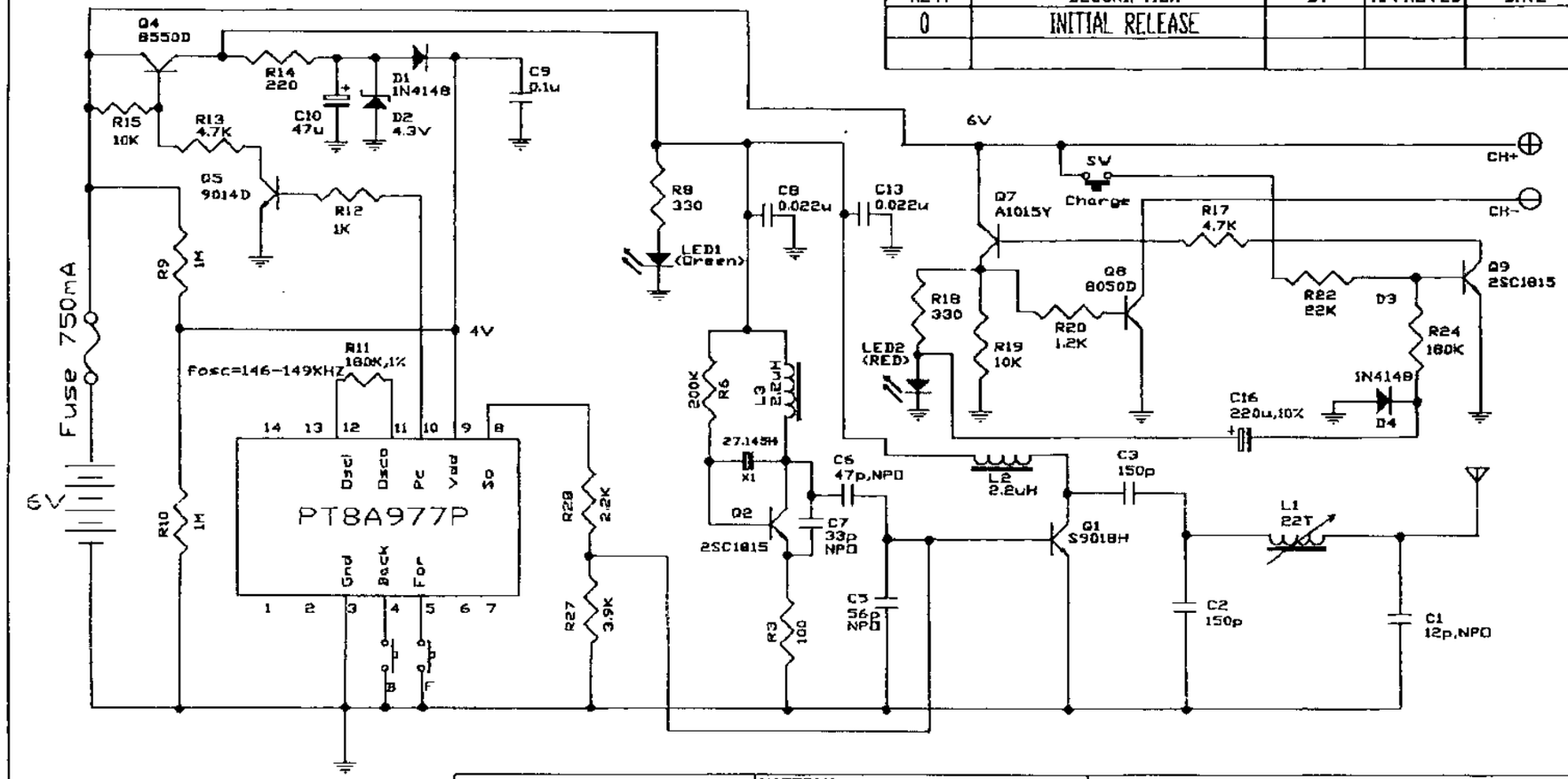

TOLERANCE UNLESS OTHERWISE SPECIFIED	MATERIAL : /	MAISTO INTERNATIONAL LIMITED
X.X = ± / ANGLE = ± / °		
X.XX = ± / X/X = ± /	FINISH : /	TITLE : MAIN PCB (USA)
X.XXX = ± /		
DIMENSIONS : /	APPROVAL / DATE	PROJ. NAME : 0049(27MHZ)
SCALE : /	DWN. : / 7 JUNE 2001	PART NO. : /
PROJECTION / SIZE A4	CHK. :	DRG. NAME : 1C004902 ACAD
	APP. :	DRG. TYPE : CIRCUIT_DIAGRAM
	DO NOT SCALE DRAWING	SHEET : 1 OF 1
		FILE NAME : 0049SCH.DWG

REV.	PART/ASSY NO.	DATE
APPLICATION		

REV. 0

F.4/4