SAR Dipole

Performance Measurement Report

ISSUED BY
Shenzhen BALUN Technology Co., Ltd.

FOR

Validation Dipoles

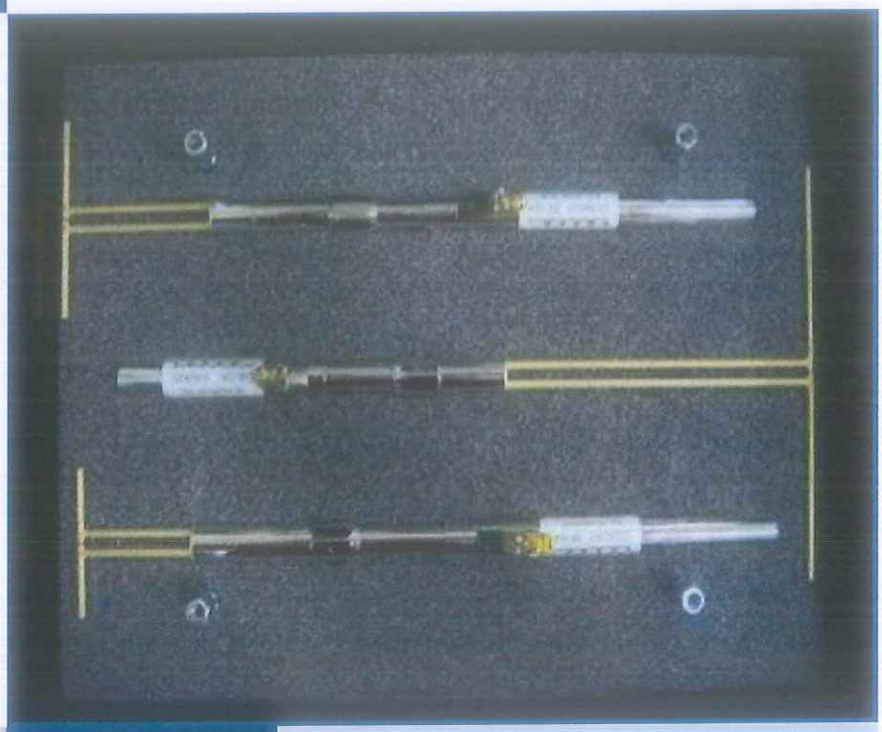

Tested by: Zong Liyao
(Engineer)

Approved by: Liao Jianming
(Technical Director)

Report No.:	LW-SZ1960012-701
EUT Type:	SAR Validation Dipole
Model Name:	D750V3, D835V2, D1750V2 D1900V2, D2600V2 D5GHzV2
Brand Name:	Speag
Test Conclusion:	Pass
Test Date:	Mar. 12, 2019 ~ Jul. 13, 2019
Date of Issue:	Jul. 19, 2019

NOTE: This test report can be duplicated completely for the legal use with the approval of the applicant; it shall not be reproduced except in full, without the written approval of Shenzhen BALUN Technology Co., Ltd. BALUN Laboratory. Any objections should be raised within thirty days from the date of issue. To validate the report, please contact us.

Block B, 1st FL,Baisha Science and Technology Park, Shahe Xi Road, Nanshan District, Shenzhen, Guangdong, P. R. China 518055
TEL: +86-755-66850100, FAX: +86-755-61824271
Email: info@baluntek.com
www.baluntek.com

1 GENERAL INFORMATION

1.1 Introduction

This document contains a summary of the requirements set forth by the IEEE 1528, FCC KDB 865664 D01 for reference dipoles used for SAR measurement system validations. Instead of the typical annual calibration recommended by measurement standards, the reference dipoles were demonstrated that the SAR target, impedance and return loss have remain stable, so the longer calibration interval is acceptable.

1.2 General Description for Equipment under Test (EUT)

EUT Type	DASY 5 Reference Dipoles
Manufacturer	Speag

Parameter	EUT 1	EUT 2	EUT 3	EUT 4	EUT 5	EUT 6
Model	D750V3	D835V2	D1750V2	D1900V2	D2600V2	D5GHzV2
Frequency	750 MHz	835 MHz	1750 MHz	1900 MHz	2600 MHz	5GHz-6GHz
Serial Number	SN 1055	SN 4d187	SN 1130	SN 5d193	SN 1095	SN 1200
Product Condition (New/ Used)	Used	Used	Used	Used	Used	Used
Last Cal. Date	2017/6/26	2017/6/26	2017/7/01	2017/6/30	2017/7/10	2017/6/29
Current meas. Date	2019/6/11	2019/6/11	2019/6/12	2019/6/12	2019/6/12	2019/6/13

1.3 EUT Photos

D750V3
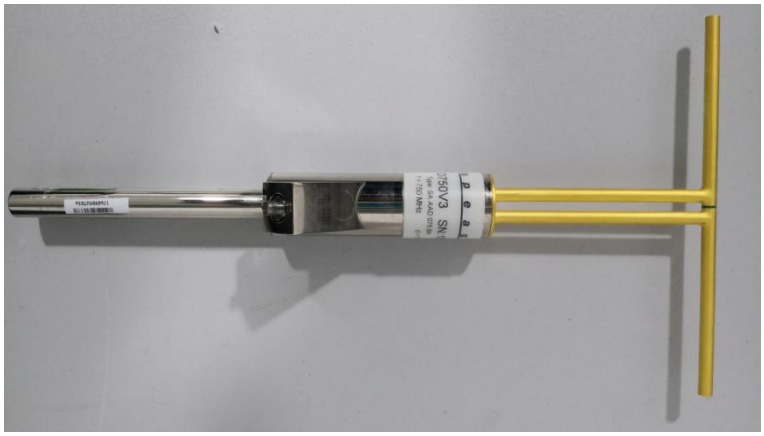
D835V2
D1750V2
D1900V2

D2600V2
D5GHzV2

2 DIPOLE IMPEDANCE AND RETURN LOSS

The dipoles are designed to have low return loss when presented against a flat phantom at the specified distance. A Vector Network Analyser was used to perform a return loss measurement on the specific dipole when in the measurement location against the phantom and the distance was specified by the manufacturer with a special, low loss and low relative permittivity spacer.
The impedance was measured at the SMA-connector with the network analyser.

The measurement of verification with return loss should not deviate by more than 20% and minimum of 20 dB of the return loss, and the impedance (real or imaginary parts) should not deviate by more than 5 Ohms from the previous measurement using network analyzer.

Note:
The “Previous Meas.” in the following table refer to dipoles or other equivalent RF sources calibration reports.

2.1 D750V3

RETURN LOSS AND IMPEDANCE IN HEAD LIQUID

Meas. Results	Current Meas.	Previous Meas.	Max. Deviation
Return Loss(dB)	-31.226	-30.728	1.6%
Impedance	53.093 Ω - 3.069 jΩ	52.793 Ω - 3.016 jΩ	0.3Ω (Real part)

Return Loss

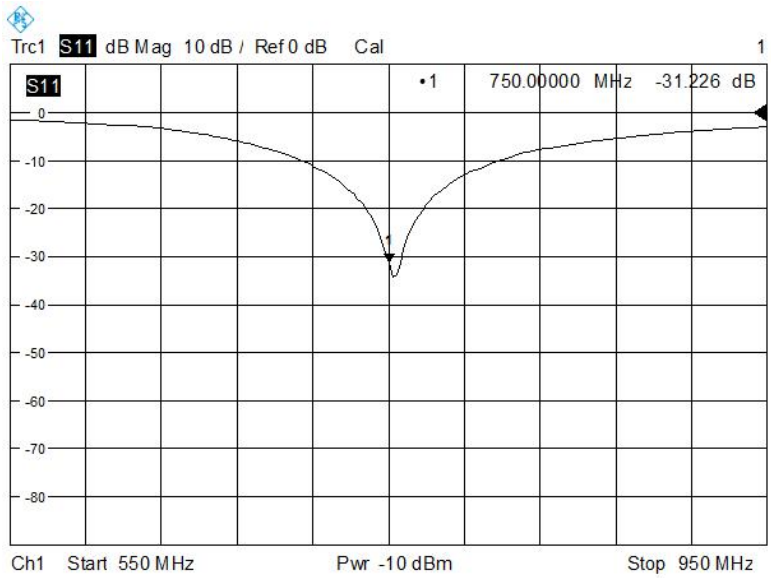

Impedance

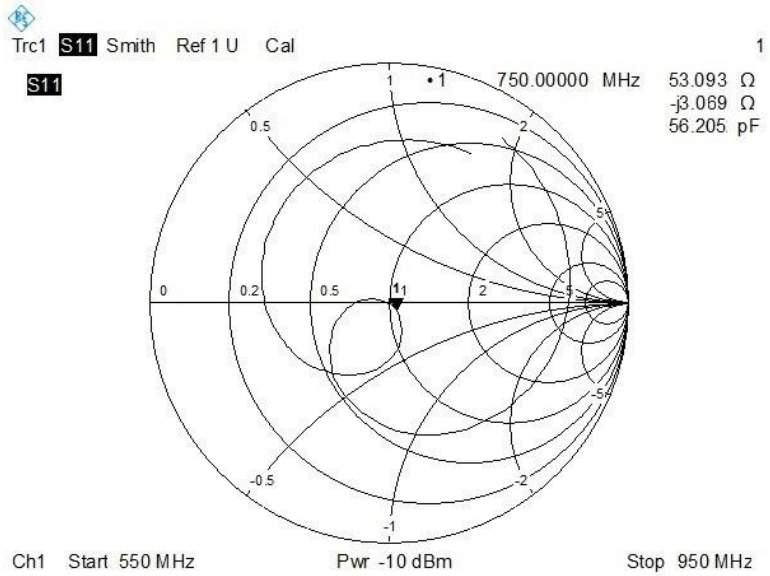

RETURN LOSS AND IMPEDANCE IN BODY LIQUID

Meas. Results	Current Meas.	Previous Meas.	Max. Deviation
Return Loss(dB)	-31.108	-30.881	0.7%
Impedance	51.346 Ω - 3.056 jΩ	51.921 Ω - 3.131 jΩ	-0.575Ω (Real part)

Return Loss

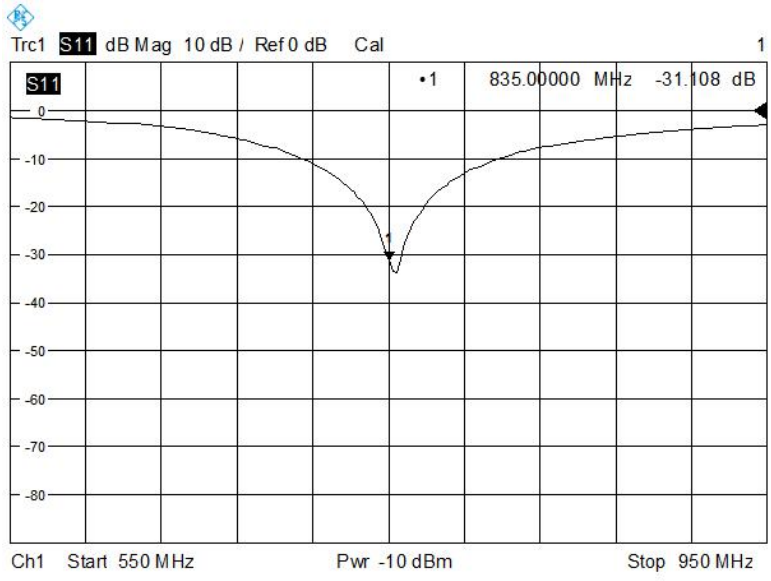

Impedance

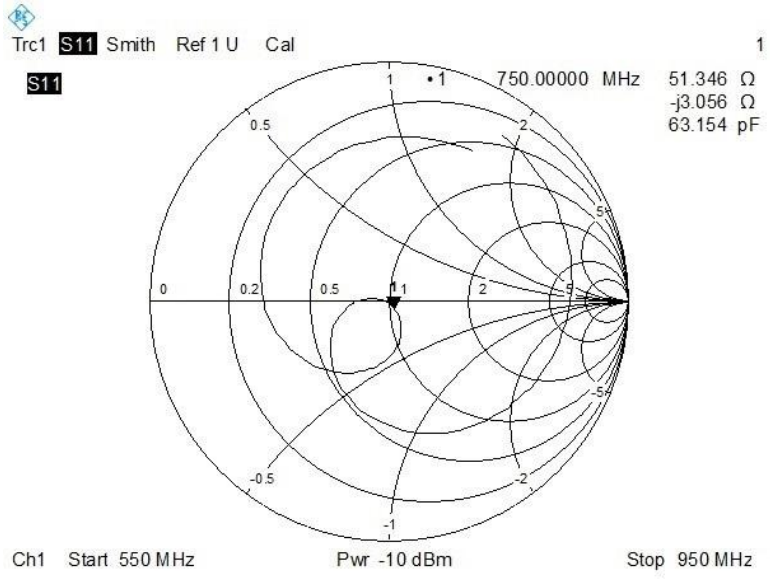

2.2 D835V2

RETURN LOSS AND IMPEDANCE IN HEAD LIQUID

Meas. Results	Current Meas.	Previous Meas.	Max. Deviation
Return Loss(dB)	28.299	-29.391	-3.715%
Impedance	47.275Ω – 1.665 jΩ	48.614 Ω - 2.557 jΩ	-1.339Ω (Real part)

Return Loss

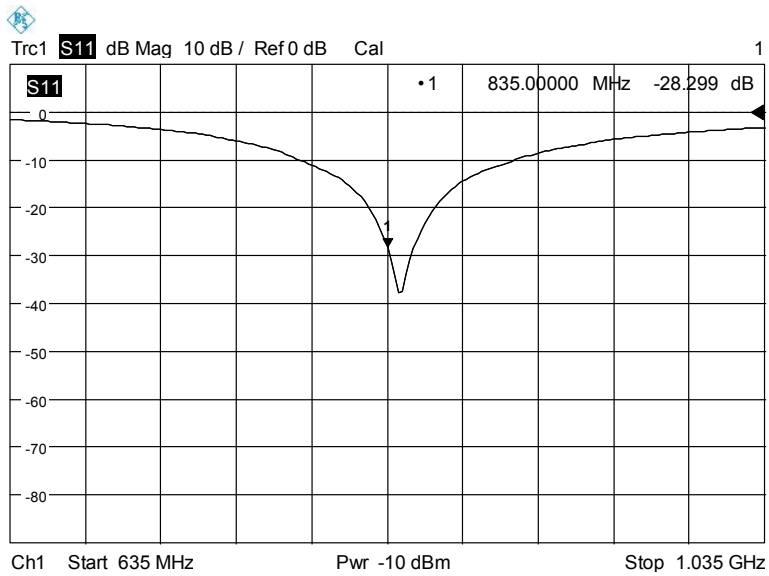

Impedance

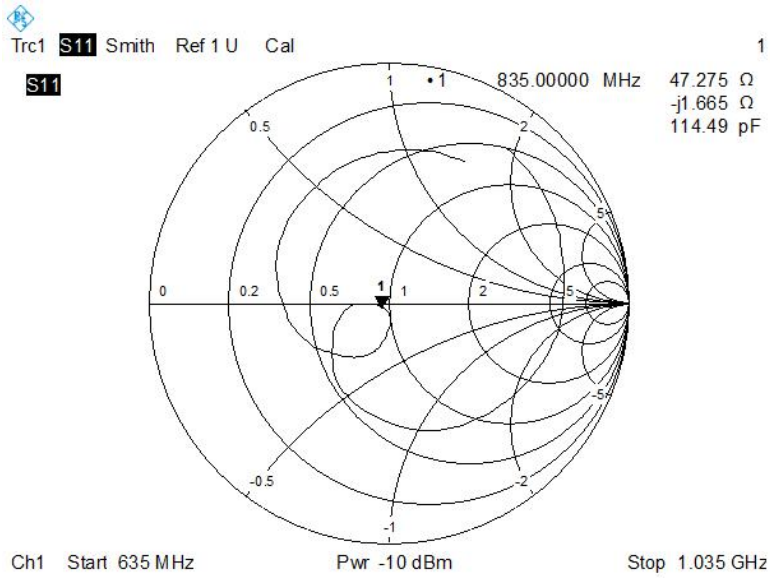

RETURN LOSS AND IMPEDANCE IN BODY LIQUID

Meas. Results	Current Meas.	Previous Meas.	Max. Deviation
Return Loss(dB)	-24.368	-25.430	-4.2%
Impedance	47.851 Ω - 3.128 jΩ	46.544 Ω - 3.507 jΩ	1.307Ω (Real part)

Return Loss

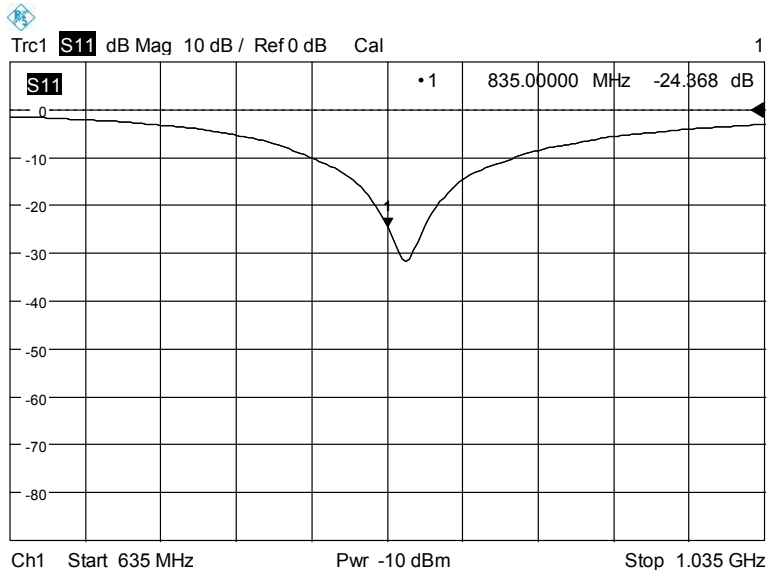

Impedance

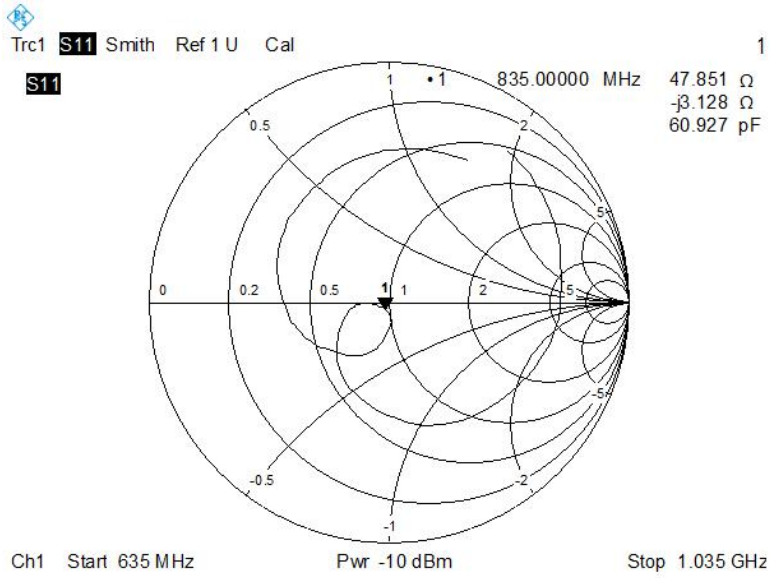

2.3 3.3 D1750V2

RETURN LOSS AND IMPEDANCE IN HEAD LIQUID

Meas. Results	Current Meas.	Previous Meas.	Max. Deviation
Return Loss(dB)	-35.282	-34.478	2.3%
Impedance	46.850 Ω +0.273 jΩ	48.643 Ω - 1.407 jΩ	-1.793Ω (Imaginary part)

Return Loss

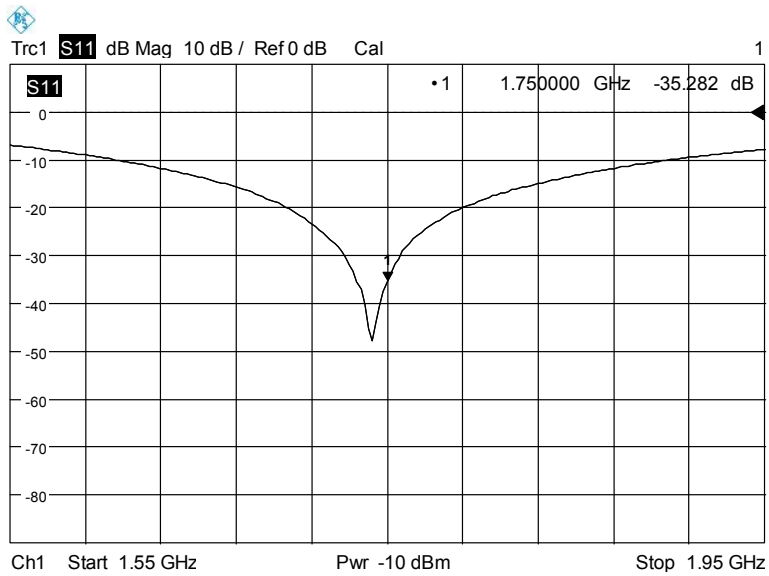

Impedance

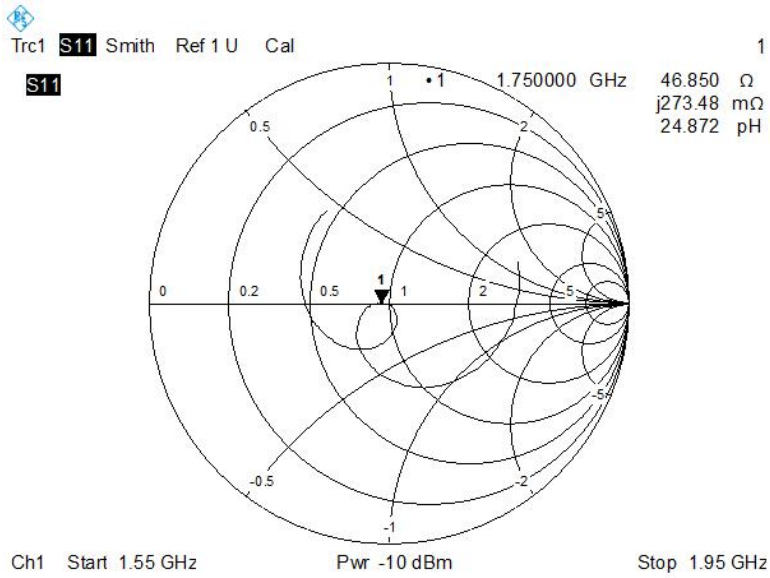

RETURN LOSS AND IMPEDANCE IN BODY LIQUID

Meas. Results	Current Meas.	Previous Meas.	Max. Deviation
Return Loss(dB)	-28.005	-27.872	0.5%
Impedance	48.868 Ω - 1.505 jΩ	46.763 Ω + 0.612 jΩ	-2.117Ω (Real part)

Return Loss

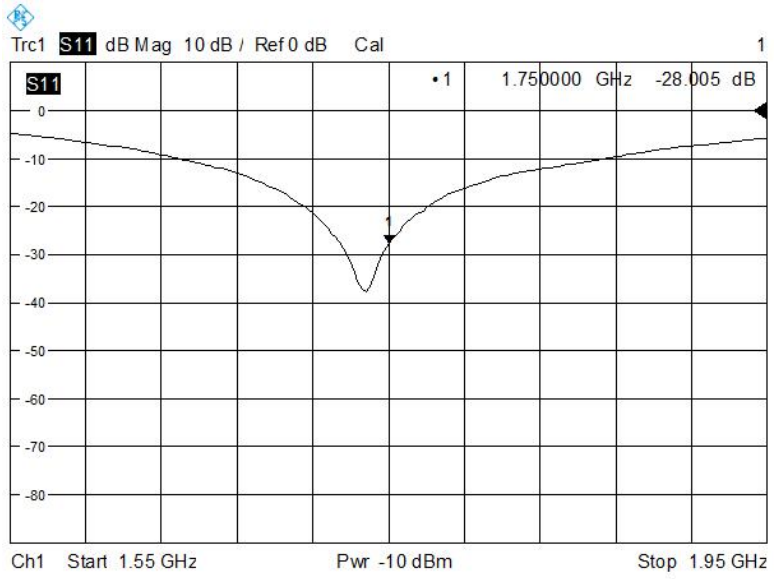

Impedance

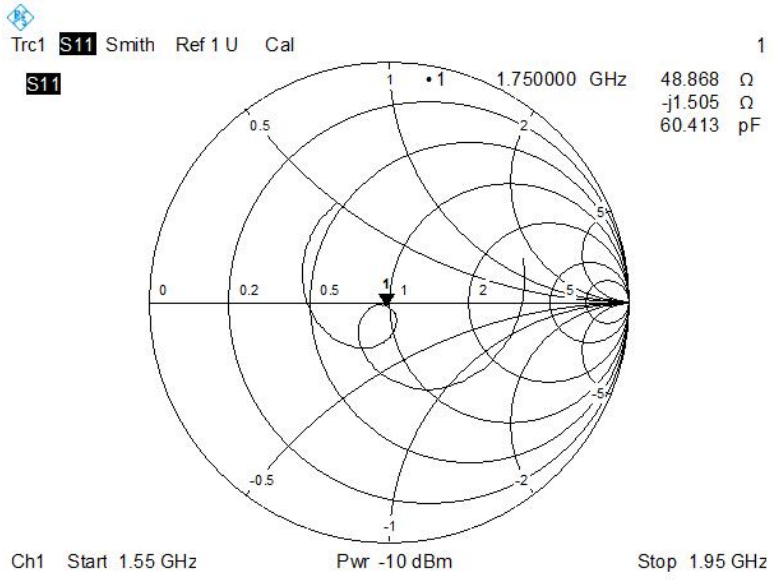

2.4 D1900V2

RETURN LOSS AND IMPEDANCE IN HEAD LIQUID

Meas. Results	Current Meas.	Previous Meas.	Max. Deviation
Return Loss(dB)	-26.058	-25.822	0.9%
Impedance	46.629 Ω + 4.040 jΩ	48.893 Ω + 5.253 jΩ	-2.264Ω (Real part)

Return Loss

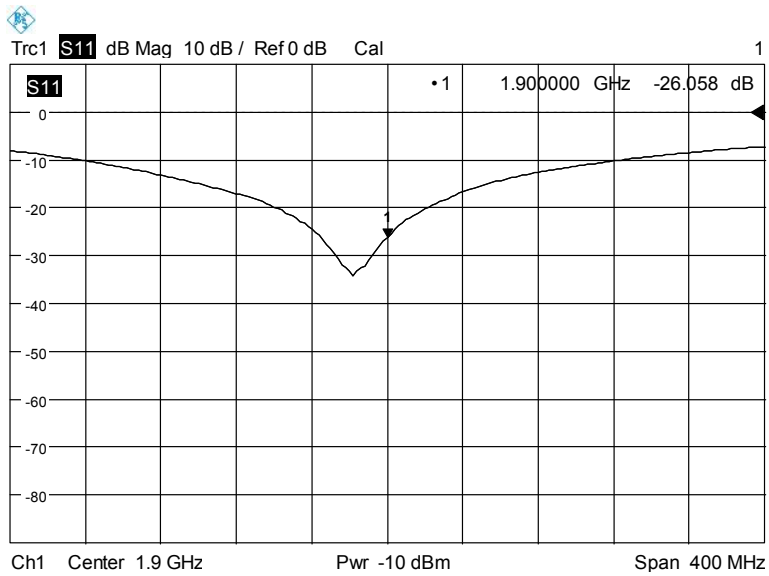

Impedance

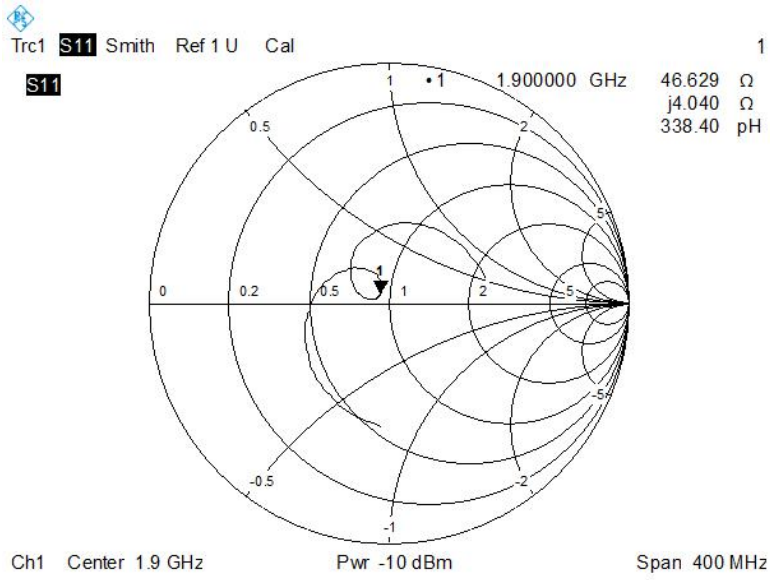

RETURN LOSS AND IMPEDANCE IN BODY LIQUID

Meas. Results	Current Meas.	Previous Meas.	Max. Deviation
Return Loss(dB)	-25.807	-24.513	5.3%
Impedance	45.326 Ω + 4.648 jΩ	46.749 Ω + 4.221 jΩ	-1.423Ω (Real part)

Return Loss

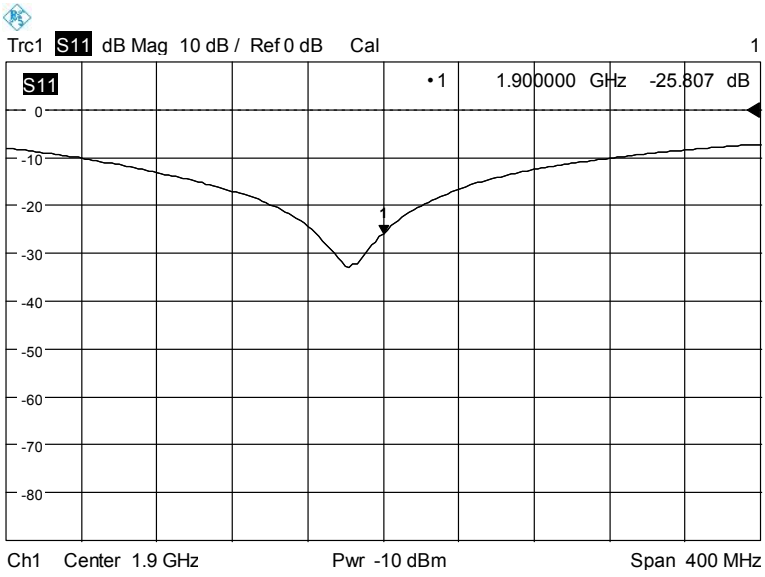

Impedance

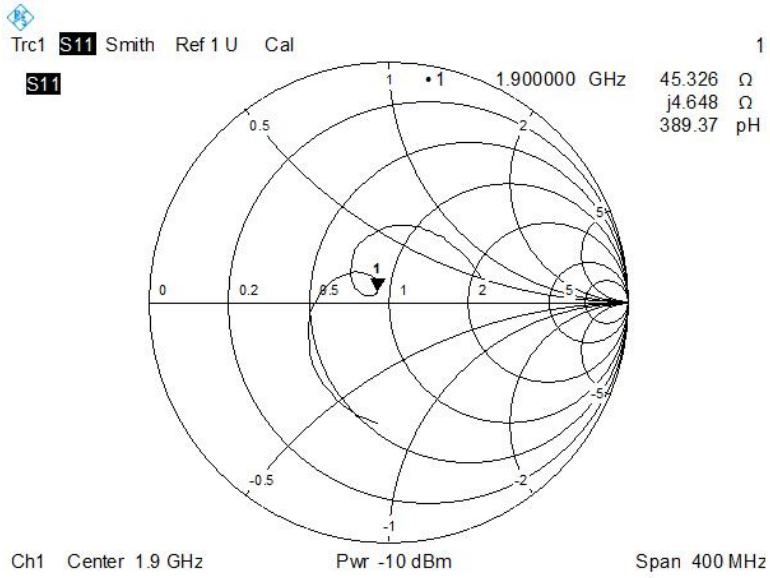

2.5 D2600V2

RETURN LOSS AND IMPEDANCE IN HEAD LIQUID

Meas. Results	Current Meas.	Previous Meas.	Max. Deviation
Return Loss(dB)	-22.296	-22.192	0.5%
Impedance	43.186 Ω -4.727 jΩ	46.754 Ω -7.288 jΩ	-3.568Ω (Real part)

Return Loss

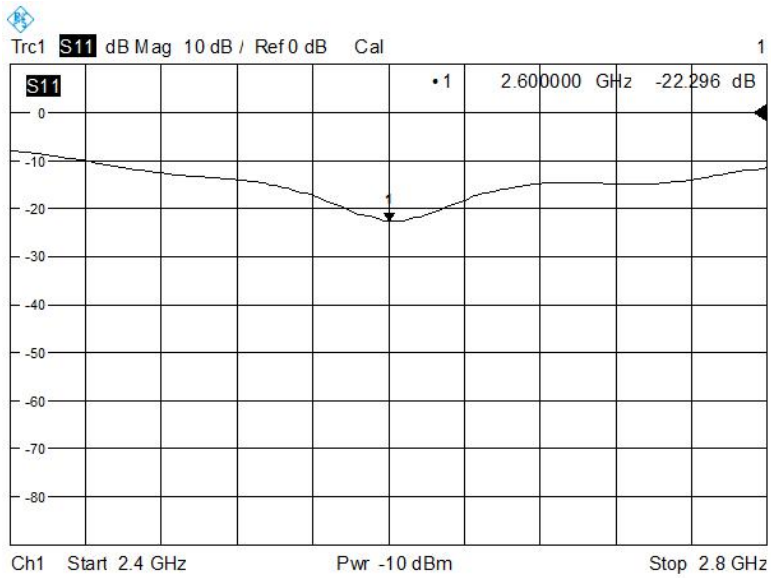

Impedance

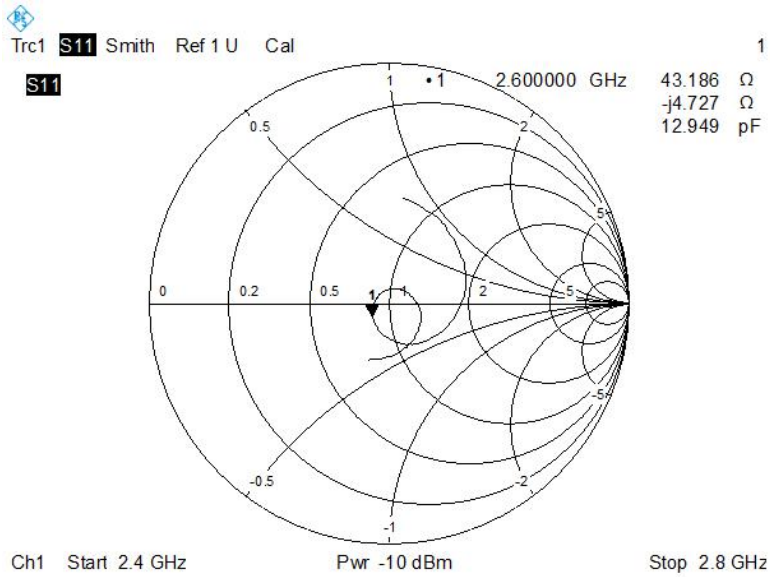

RETURN LOSS AND IMPEDANCE IN BODY LIQUID

Meas. Results	Current Meas.	Previous Meas.	Max. Deviation
Return Loss(dB)	-22.987	-21.794	5.5%
Impedance	41.679 Ω -4.509 jΩ	46.334 Ω -5.883 jΩ	-4.655Ω (Real part)

Return Loss

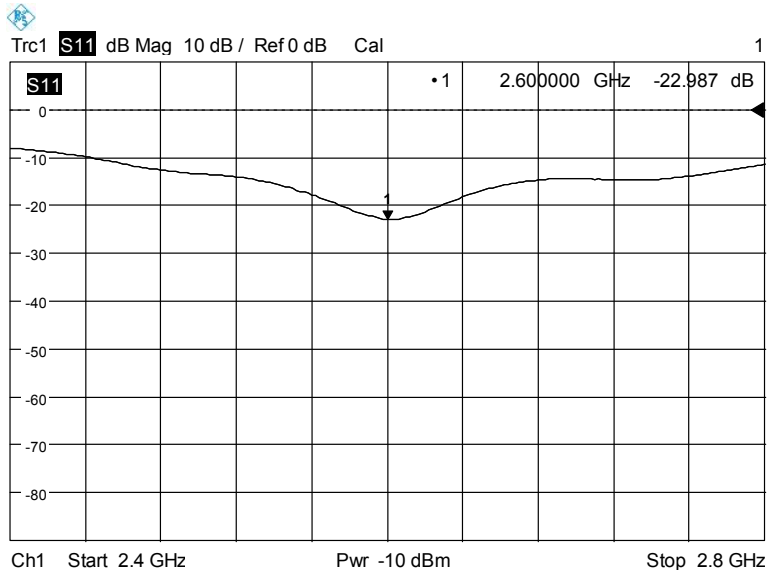

Impedance

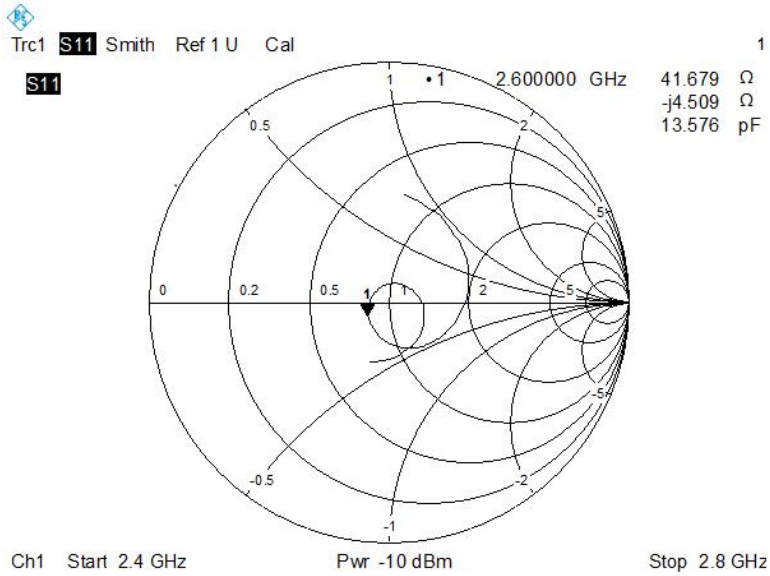

2.6 D5GHzV2

RETURN LOSS AND IMPEDANCE IN HEAD LIQUID

Meas. Results	Current Meas.	Previous Meas.	Max. Deviation
5250 MHz			
Return Loss(dB)	-26.080	-25.052	4.1%
Impedance	47.846 Ω -2.328 jΩ	47.735 Ω -4.621 jΩ	2.293Ω (Imaginary n part)
5600 MHz			
Return Loss(dB)	-24.770	-26.377	-6.1%
Impedance	51.601 Ω -1.626 jΩ	54.525 Ω+2.142 jΩ	-2.924Ω (Real part)
5750 MHz			
Return Loss(dB)	-31.141	-29.503	5.6%
Impedance	52.318 Ω -3.066 jΩ	51.171 Ω -3.278 jΩ	1.147Ω (Real part)

Return Loss

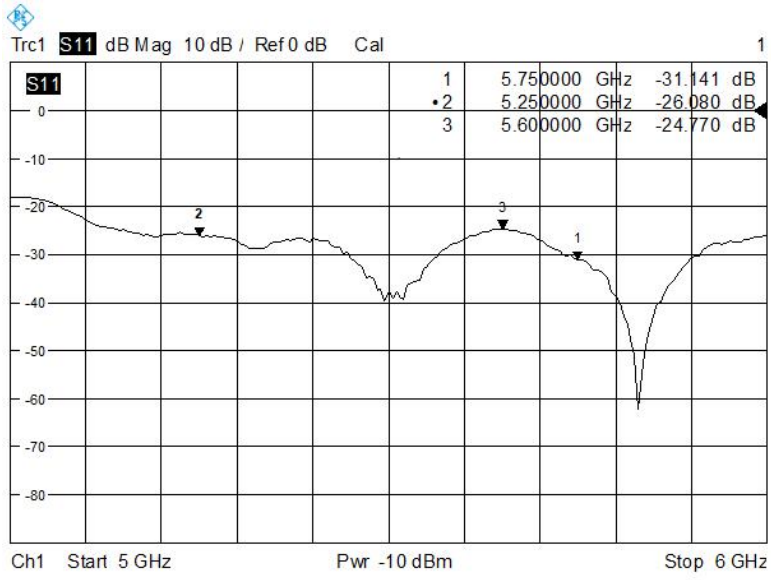

Impedance

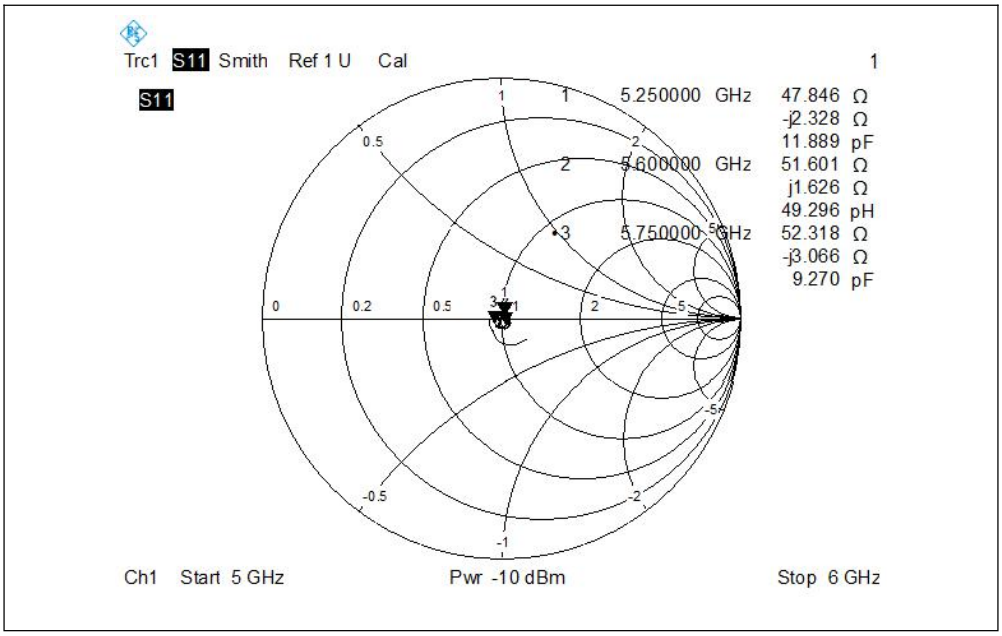
Trc1 S11 Smith Ref 1 U Cal
1
S11
1 5.250000 GHz 47.846 Ω
-j2.328 Ω
11.889 pF
2 5.600000 GHz 51.601 Ω
j1.626 Ω
49.296 pH
3 5.750000 GHz 52.318 Ω
-j3.066 Ω
9.270 pF
Ch1 Start 5 GHz
Pwr -10 dBm
Stop 6 GHz

RETURN LOSS AND IMPEDANCE IN BODY LIQUID

Meas. Results	Current Meas.	Previous Meas.	Max. Deviation
5250 MHz			
Return Loss(dB)	-31.244	-30.483	2.5%
Impedance	48.790 Ω -1.843 jΩ	47.975 Ω -2.840 jΩ	0.997Ω (Imaginary n part)
5600 MHz			
Return Loss(dB)	-24.96	-24.636	1.3%
Impedance	52.580 Ω +1.825 jΩ	54.321 Ω + 3.910 jΩ	-2.085Ω (Imaginary n part)
5750 MHz			
Return Loss(dB)	-30.060	-29.774	1.0%
Impedance	52.428 Ω -3.262 jΩ	51.737 Ω -2.126 jΩ	-1.136Ω (Imaginary n part)

Return Loss

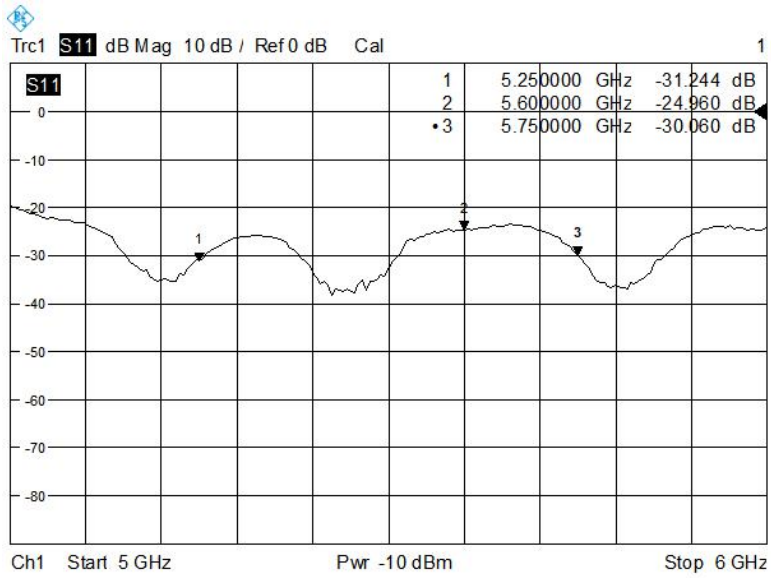

Impedance

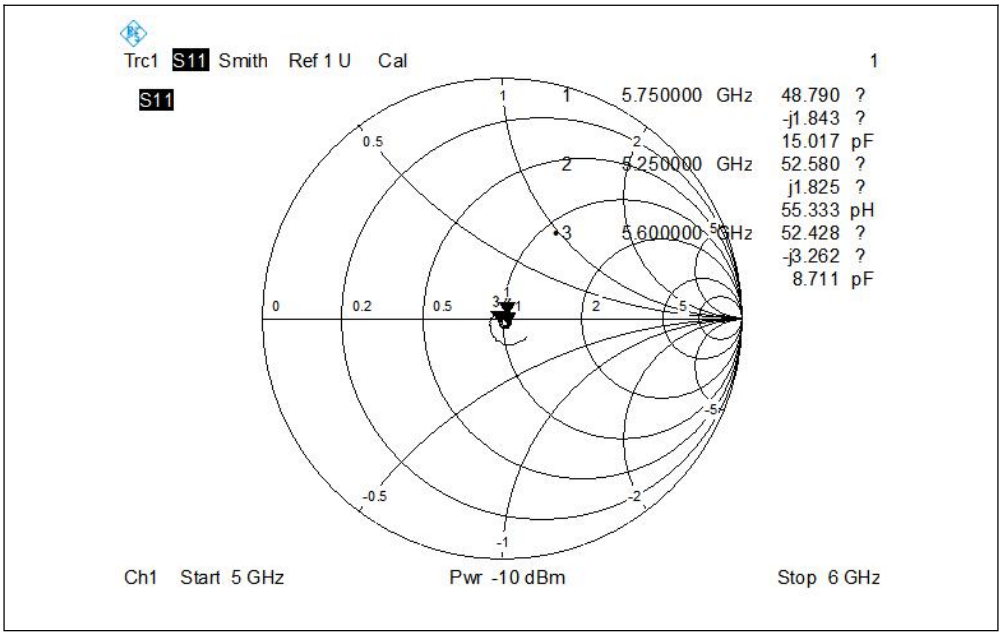

--END OF REPORT--