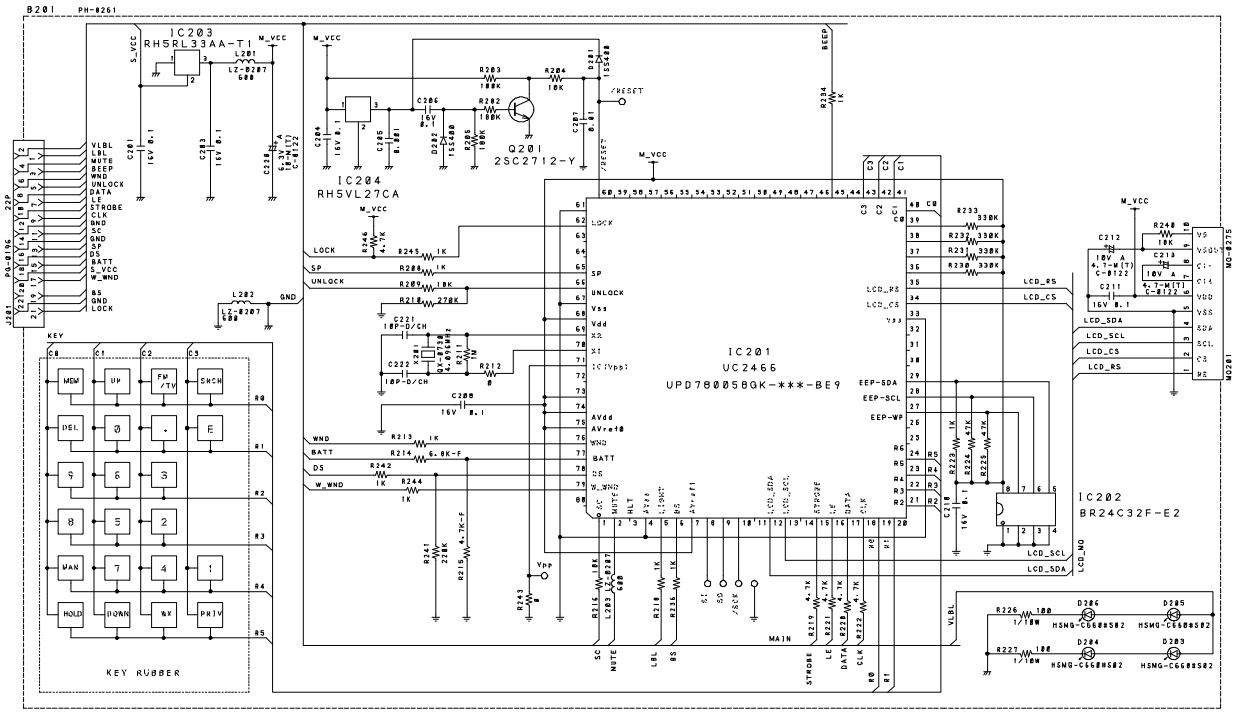

NOTES: 1. RESISTANCE VALUES ARE SHOWN IN OHMS UNLESS OTHERWISE NOTED. (K=KILO OHM, M=MEG OHM)
2. RESISTOR WATTAGES ARE [1/16W] UNLESS OTHERWISE NOTED.
3. CAPACITANCE VALUES ARE INDICATED IN MICRO FARADS UNLESS OTHERWISE NOTED. (P=MICRO-MICRO FARAD)
4. ALL CAPACITORS TEMPERATURE CHARACTERISTICS ARE [CH] (LESS THAN 820PF) OR [B] (MORE THAN 1000PF) UNLESS OTHERWISE NOTED.
5. CHIP CAPACITORS TYPE ARE [1608] 50V UNLESS OTHERWISE NOTED.

DESIGN	DRAWN.BY	UNIDEN No.	MODEL No.
'99/05/04	'99/08/27	UB-310Z	SCANNOCULAR
AKIYAMAT	AKIYAMAT	TITLE MICOM ASS'Y	
CHECK.BY	APPRO.BY	SCHEMATIC DIAGRAM	
		DRAWING No.	
REV.No		UNIDEN CORP.	