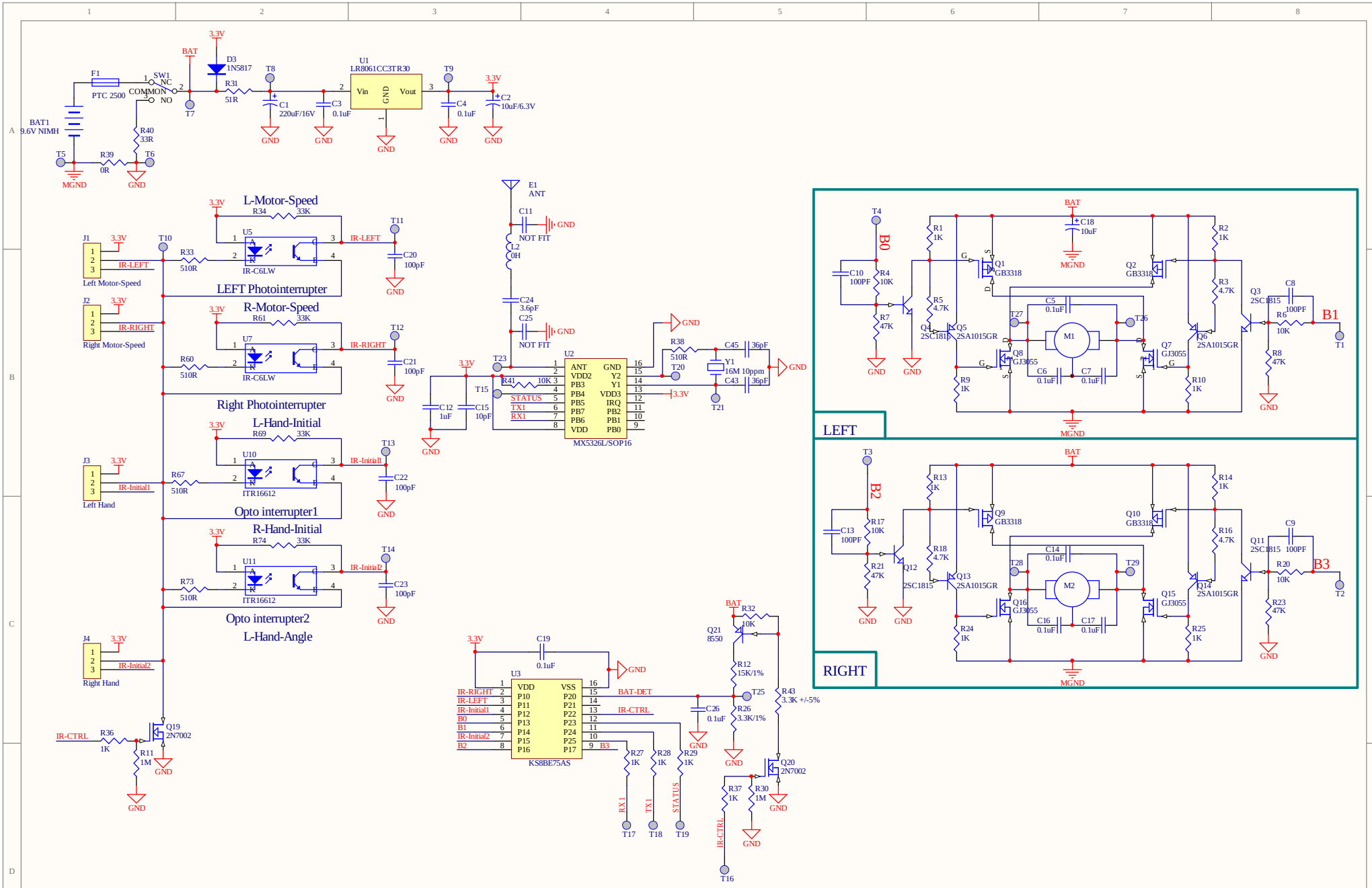

Confidential Property of Jetta Company Ltd.

Drawed By:	XHZHANG	Title	2.4G RX MAIN		Jetta (China) Co. Ltd.
Checked By:	HBRAN	Size: A3	Number: DNR84	Revision: 01	Corresponding PCB :
Approved By:	LFLI	Date: 2016/3/14	Time: 下午 04:03:58	Sheet* of *	
		File: D:\Users\xhzhang02\zxh1\2015 project\DNR84(0020)MAIN\DNR84+003+0020(01-00)\DNR84+003+0020 REV01.SchDoc			