| Type | IC400 |
|---|---|
| 0-10, 0-11, 0-21, 3-01, 3-02<br>2-71, 2-72, 2-73 | M67741H-32 |
| 0-12, 0-13, 3-03, 3-04 | M67741L-35 |
| 0-14, 0-15, 3-05 | M68702H |
| 0-16, 0-17, 3-06 | M68702L |

| USE FOR | SYMBOL | REVISION NO | | CODE | ISSUED | DATE |
|---|---|---|---|---|---|---|
| X57-595*-** | X 7 | 33905 | 33953 | | T. Matsuoka | 99-08-20 |
| | X 3 | 34068 | | | T. Matsuoka | 99-08-26 |
| | X 3 | 34168 | 34190 | | T. Matsuoka | 99-09-02 |
| | X 28 | 改掛設完 | | | T. Matsuoka | 99-09-21 |
| | X 4 | 34692 | | | W. FUKIYA | 99-09-28 |
| | X 1 | 34992 | | | W. FUKIYA | 99-10-20 |
| | X 18 | 35137 | | | T. Matsuoka | 99-10-26 |
| | X 2 | 35311 | | | W. FUKIYA | 99-11-08 |
| | X 71 | 改掛設完 | | | T. KOBAYASHI | 99-11-25 |
| | X 4 | 35632 | | | W. FUKIYA | 1999-12-06 |
| | X 5 | 35689 | | | W. FUKIYA | 1999-12-09 |
| | X 19 | 35831 | | | T. ONUKI | 2000-01-07 |
| | X 2 | 36295 | 36382 | | T. Matsuoka | 2000-02-01 |
| | X 25 | 36590 | | | T. Matsuoka | 2000-02-19 |
| | X 32 | 改掛追加 | | | Y. KUBO | 2000-03-28 |
| | X 22 | 37645 | 37814 | | W. FUKIYA | 2000-05-15 |
| | X 10 | 37841 | | | W. FUKIYA | 2000-05-16 |
| | X 2 | 37985 | | | T. Matsuoka | 2000-05-22 |
| | X 34 | 改掛追加 | | | Y. KUBO | 2000-06-22 |
| | X | | | | | |
| | X | | | | | |

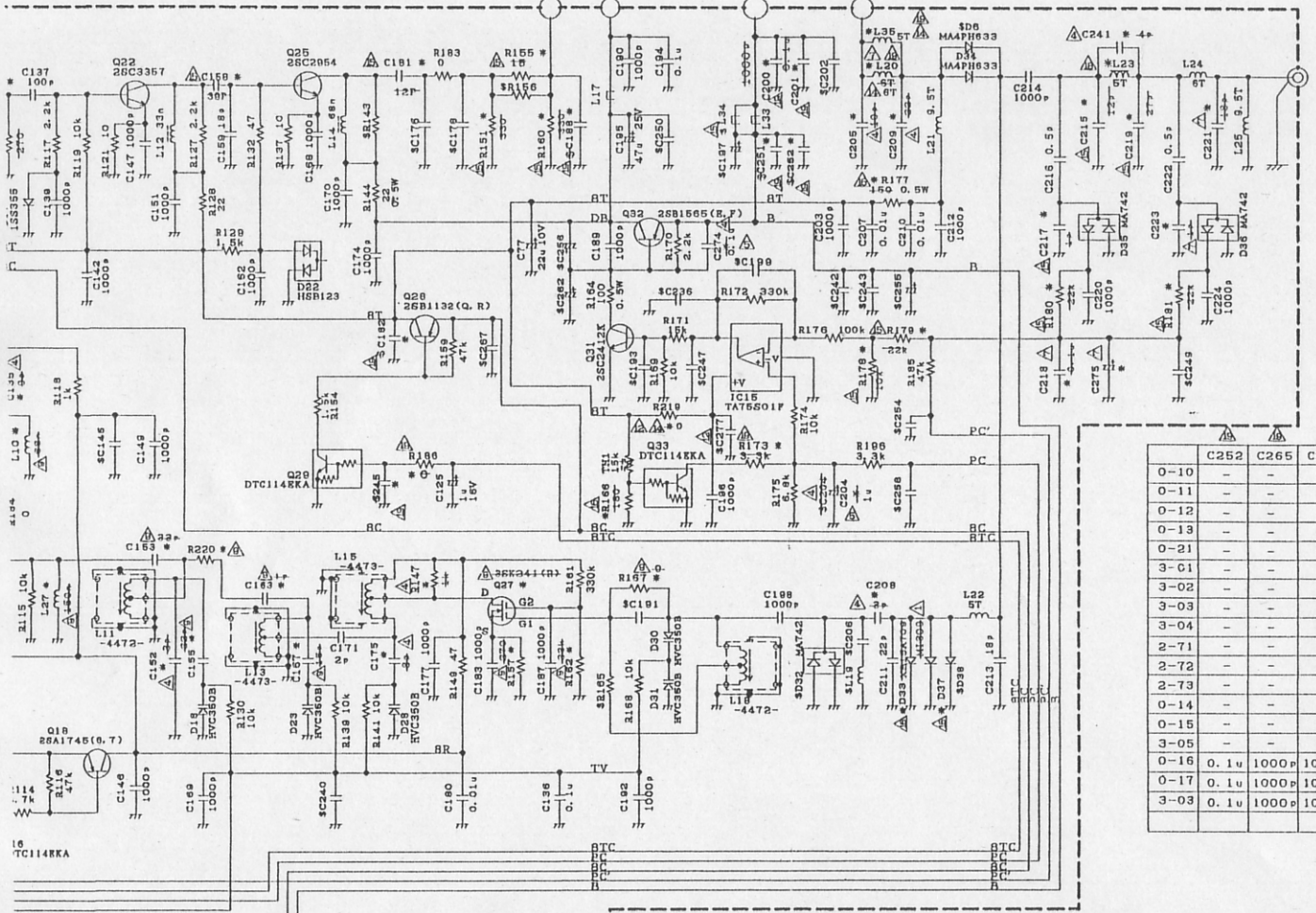


| | C252 | C265 | C276 | R173 | R186 |
|---|---|---|---|---|---|
| 0-10 | – | – | – | 3.3k | 0 |
| 0-11 | – | – | – | 3.3k | 0 |
| 0-12 | – | – | – | 3.3k | 0 |
| 0-13 | – | – | – | 3.3k | 0 |
| 0-21 | – | – | – | 3.3k | 0 |
| 3-01 | – | – | – | 3.3k | 0 |
| 3-02 | – | – | – | 3.3k | 0 |
| 3-03 | – | – | – | 3.3k | 0 |
| 3-04 | – | – | – | 3.3k | 0 |
| 2-71 | – | – | – | 3.3k | 0 |
| 2-72 | – | – | – | 3.3k | 0 |
| 2-73 | – | – | – | 3.3k | 0 |
| 0-14 | – | – | – | 3.3k | 0 |
| 0-15 | – | – | – | 3.3k | 0 |
| 3-05 | – | – | – | 3.3k | 0 |
| 0-16 | 0.1u | 1000p | 1000p | 2.2k | 10 |
| 0-17 | 0.1u | 1000p | 1000p | 2.2k | 10 |
| 3-03 | 0.1u | 1000p | 1000p | 2.2k | 10 |

| | C158 | C181 | C215 | C217 | C219 | D26 | D29 | L34 | R178 | R179 | R180 | R181 | R166 | R177 | D33 | D37 | L23 | C182 | C188 | C200 | C201 | C245 | C251 |
|---|---|---|---|---|---|---|---|---|---|---|---|---|---|---|---|---|---|---|---|---|---|---|---|
| 0-10 | 39P | 12P | 12P | 1P | 27P | – | DSM3MA1 | – | 10K | 22K | 22K | 22K | 180 | 150 | XB15A709 | – | -0742- | – | – | 1000p | 0.1u | – | – |
| 0-11 | 39P | 12P | 12P | 1P | 27P | – | DSM3MA1 | – | 10K | 22K | 22K | 22K | 180 | 150 | XB15A709 | – | -0742- | – | – | 1000p | 0.1u | – | – |
| 0-12 | 39P | 12P | 12P | 1P | 27P | – | DSM3MA1 | – | 10K | 22K | 22K | 22K | 180 | 150 | XB15A709 | – | -0742- | – | – | 1000p | 0.1u | – | – |
| 0-13 | 39P | 12P | 12P | 1P | 27P | – | DSM3MA1 | – | 10K | 22K | 22K | 22K | 180 | 150 | XB15A709 | – | -0742- | – | – | 1000p | 0.1u | – | – |
| 0-21 | 39P | 12P | 12P | 1P | 27P | – | DSM3MA1 | – | 10K | 22K | 22K | 22K | 180 | 150 | XB15A709 | – | -0742- | – | – | 1000p | 0.1u | – | – |
| 3-01 | 39P | 12P | 12P | 1P | 27P | – | DSM3MA1 | – | 10K | 22K | 22K | 22K | 180 | 150 | XB15A709 | – | -0742- | – | – | 1000p | 0.1u | – | – |
| 3-02 | 39P | 12P | 12P | 1P | 27P | – | DSM3MA1 | – | 10K | 22K | 22K | 22K | 180 | 150 | XB15A709 | – | -0742- | – | – | 1000p | 0.1u | – | – |
| 3-03 | 39P | 12P | 12P | 1P | 27P | – | DSM3MA1 | – | 10K | 22K | 22K | 22K | 180 | 150 | XB15A709 | – | -0742- | – | – | 1000p | 0.1u | – | – |
| 3-04 | 39P | 12P | 12P | 1P | 27P | – | DSM3MA1 | – | 10K | 22K | 22K | 22K | 180 | 150 | XB15A709 | – | -0742- | – | – | 1000p | 0.1u | – | – |
| 2-71 | 39P | 12P | 12P | 1P | 27P | – | DSM3MA1 | – | 10K | 22K | 22K | 22K | 180 | 150 | XB15A709 | – | -0742- | – | – | 1000p | 0.1u | – | – |
| 2-72 | 39P | 12P | 12P | 1P | 27P | – | DSM3MA1 | – | 10K | 22K | 22K | 22K | 180 | 150 | XB15A709 | – | -0742- | – | – | 1000p | 0.1u | – | – |
| 2-73 | 39P | 12P | 12P | 1P | 27P | – | DSM3MA1 | – | 10K | 22K | 22K | 22K | 180 | 150 | XB15A709 | – | -0742- | – | – | 1000p | 0.1u | – | – |
| 0-14 | 27P | 39P<br>27P | 10P | 0-6P<br>1P | 18P | DSA3A1-FK | – | L92-0179-05 | 6-6K<br>8.2K | 39K | 3.3K | 5.6K | 220 | 120 | – | XB15A709 | -4655- | – | – | 1000p | 0.1u | – | – |