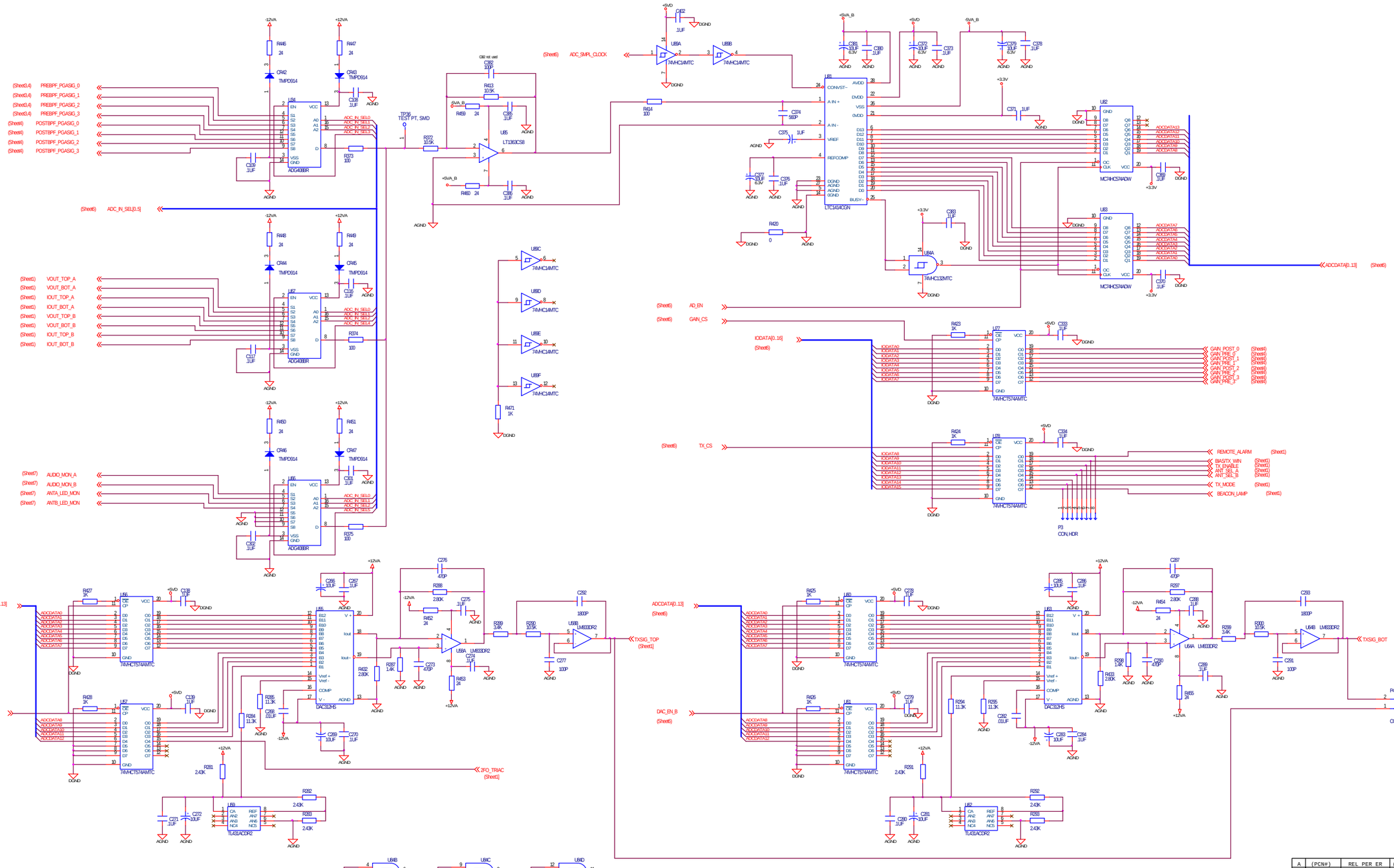

A	(PCN#)	REL PER ER	(DATE)	XXX	XXX
LTR	PCN NO.	DESCRIPTION	DATE	BY	APPD

APPROVALS		DATE
Drawn	(NAME)	(DATE)
Checked	(NAME)	(DATE)
Engr	(NAME)	(DATE)
Appd	(NAME)	(DATE)
Release	(NAME)	(DATE)

Sensormatic Electronics Corp.
951 YAMATO ROAD
BOCA RATON, FLORIDA 33431

Title: **ADS 216 DSP RECEIVER**

Size: D | Document Number: **S0301-1500-01** | Rev: 3

Date: Friday, May 05, 2000 | Sheet 5 of 7