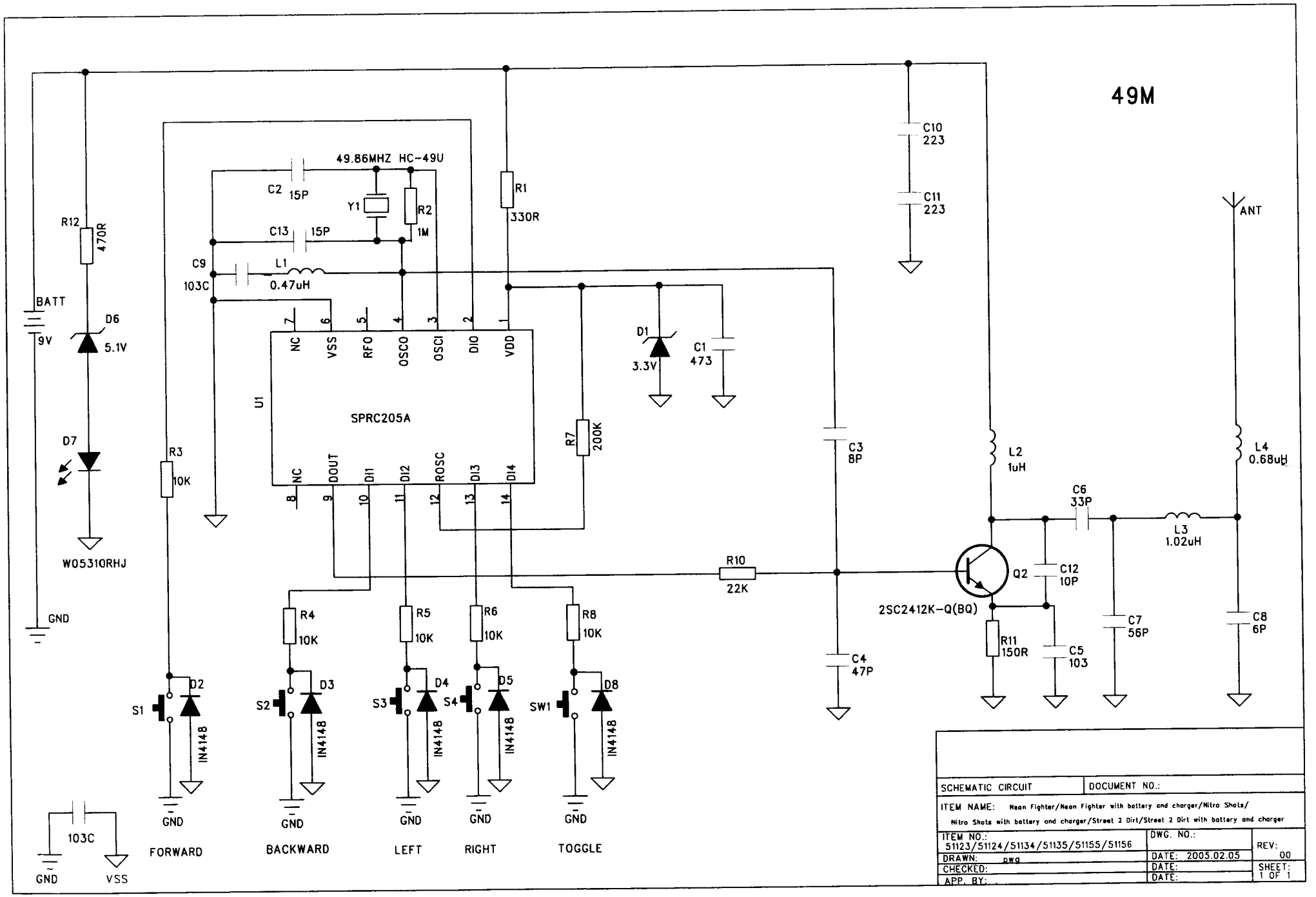
49M
49.86MHZ HC-49U
C2 15P
Y1
R2 1M
C13 15P
C9 103C
L1 0.47uH
R12 470R
BATT 9V
D6 5.1V
D7
W05310RHJ
GND
R3 10K
U1
SPRC205A
NC VSS RFO OSCO OSCI DIO VDD
NC DOUT DI1 DI2 ROSC DI3 DI4
R1 330R
D1 3.3V
C1 473
R7 200K
C3 8P
C4 47P
R10 22K
C10 223
C11 223
L2 1uH
C6 33P
L3 1.02uH
Q2
2SC2412K-Q(BQ)
C12 10P
R11 150R
C5 103
C7 56P
ANT
L4 0.68uH
C8 6P
R4 10K
R5 10K
R6 10K
R8 10K
S1 D2 IN4148 GND FORWARD
S2 D3 IN4148 GND BACKWARD
S3 D4 IN4148 GND LEFT
S4 D5 IN4148 GND RIGHT
SW1 D8 IN4148 GND TOGGLE
103C GND VSS
SCHEMATIC CIRCUIT
DOCUMENT NO.:
ITEM NAME: Neon Fighter/Neon Fighter with battery and charger/Nitro Shots/
Nitro Shots with battery and charger/Street 2 Dirt/Street 2 Dirt with battery and charger
ITEM NO.: 51123/51124/51134/51135/51155/51156
DWG. NO.:
REV: 00
DRAWN: DWG
DATE: 2005.02.05
CHECKED:
DATE:
SHEET: 1 OF 1
APP. BY:
DATE: