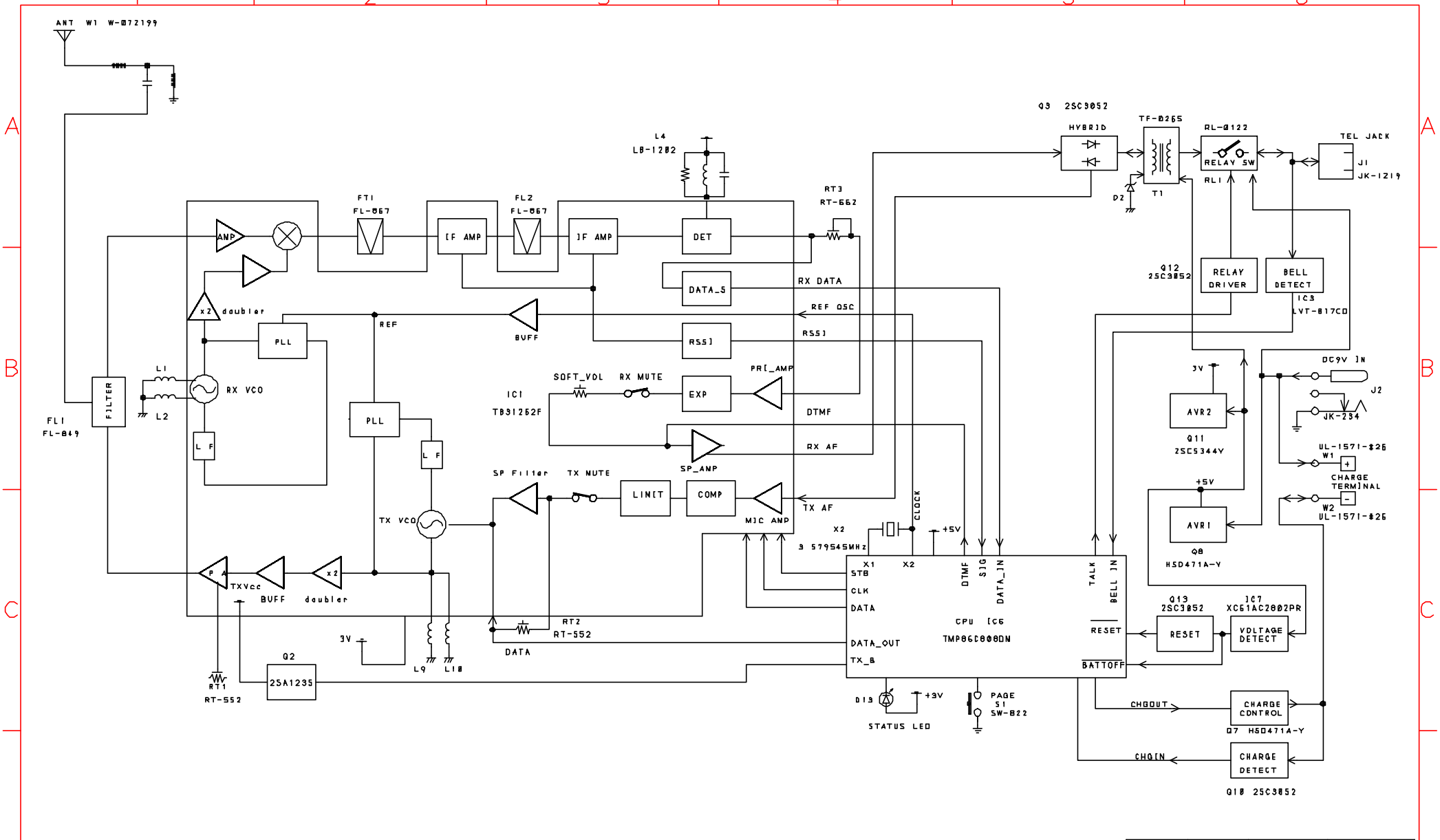

DESIGN	DRAWN BY	UNIDEN No.	MODEL No
	01 11 21	UC364ZH	EXP370
	YUGI	TITLE BASE BLOCK DIAGRAM	
CHECK BY	APPRO. BY		
		DRAWING No.	
REV. No		UNIDEN CORP	

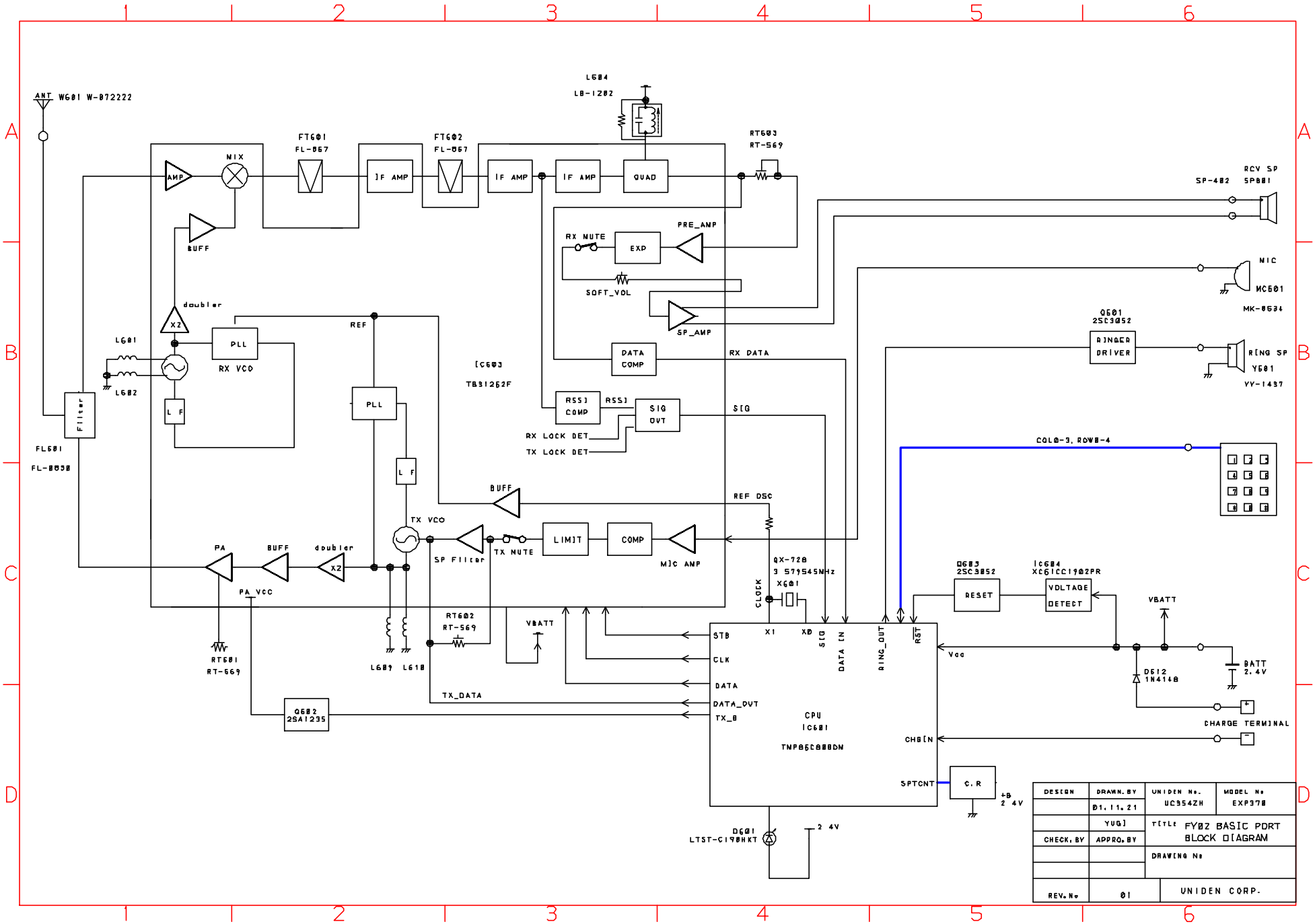

DESIGN	DRAWN. BY	UNIDEN No.	MODEL No
	01.11.21	UC954ZH	EXP378
	YUGI	TITLE	FY02 BASIC PORT BLOCK DIAGRAM
CHECK. BY	APPRO. BY		
		DRAWING No	
REV. No	01	UNIDEN CORP.	