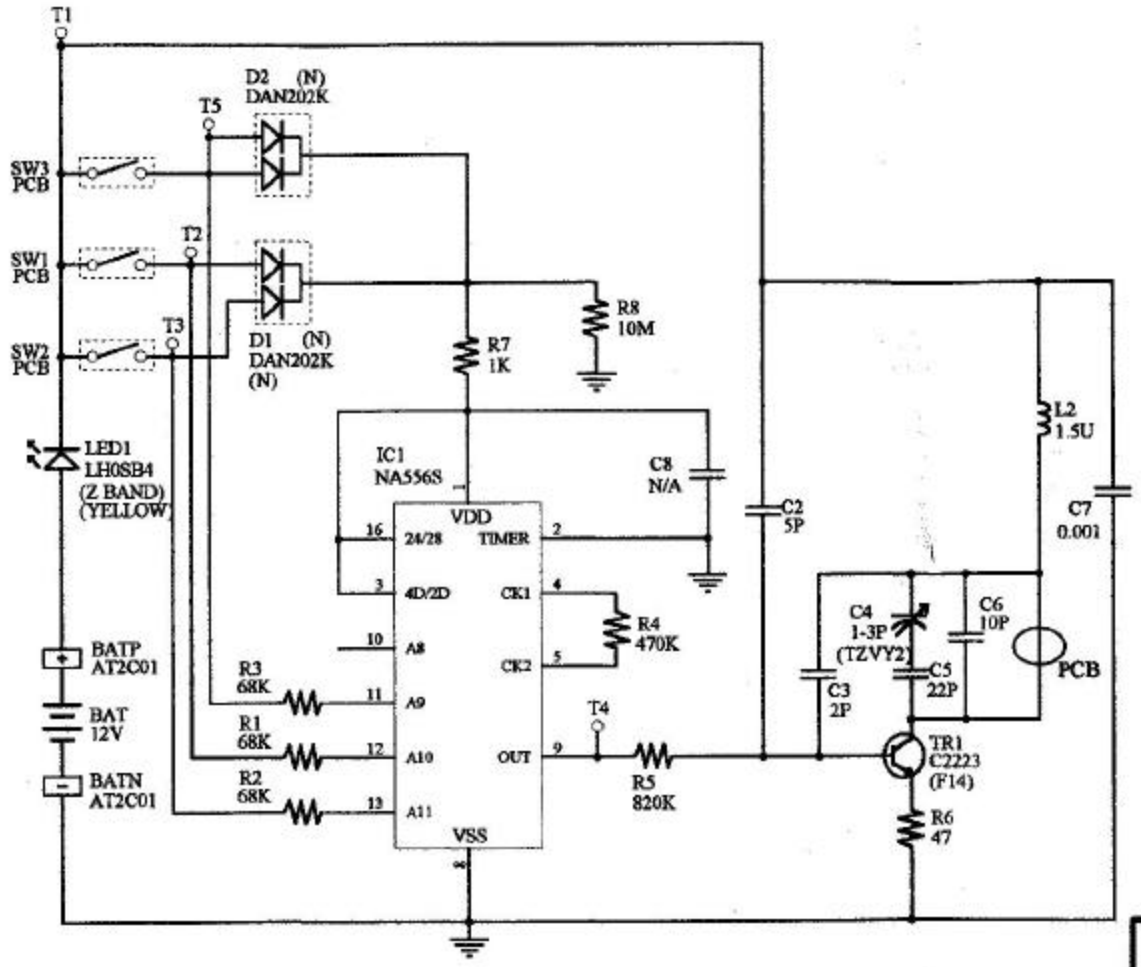
T1
D2 (N)
DAN202K
T5
SW3
PCB
SW1
PCB
T2
SW2
PCB
T3
D1 (N)
DAN202K
(N)
R8
10M
R7
1K
LED1
LH0SB4
(Z BAND)
(YELLOW)
IC1
NA556S
C8
N/A
VDD
24/28
TIMER
4D/2D
CK1
R4
470K
A8
CK2
BATP
AT2C01
R3
68K
A9
BAT
12V
R1
68K
A10
OUT
T4
BATN
AT2C01
R2
68K
A11
R5
820K
VSS
C2
5P
L2
1.5U
C7
0.001
C4
1-3P
(TZVY2)
C6
10P
C3
2P
C5
22P
PCB
TR1
C2223
(F14)
R6
47
302MHZ
N51F045A
NUTEK CORPORATION
NAME: ATAF (PRO-OE3B3)
APPD BY:
DATE:
CHK BY:
DATE:
DRN BY: FRANK SHEE
DATE: 2001 8 21
SHEET 1 OF 1
REV: A