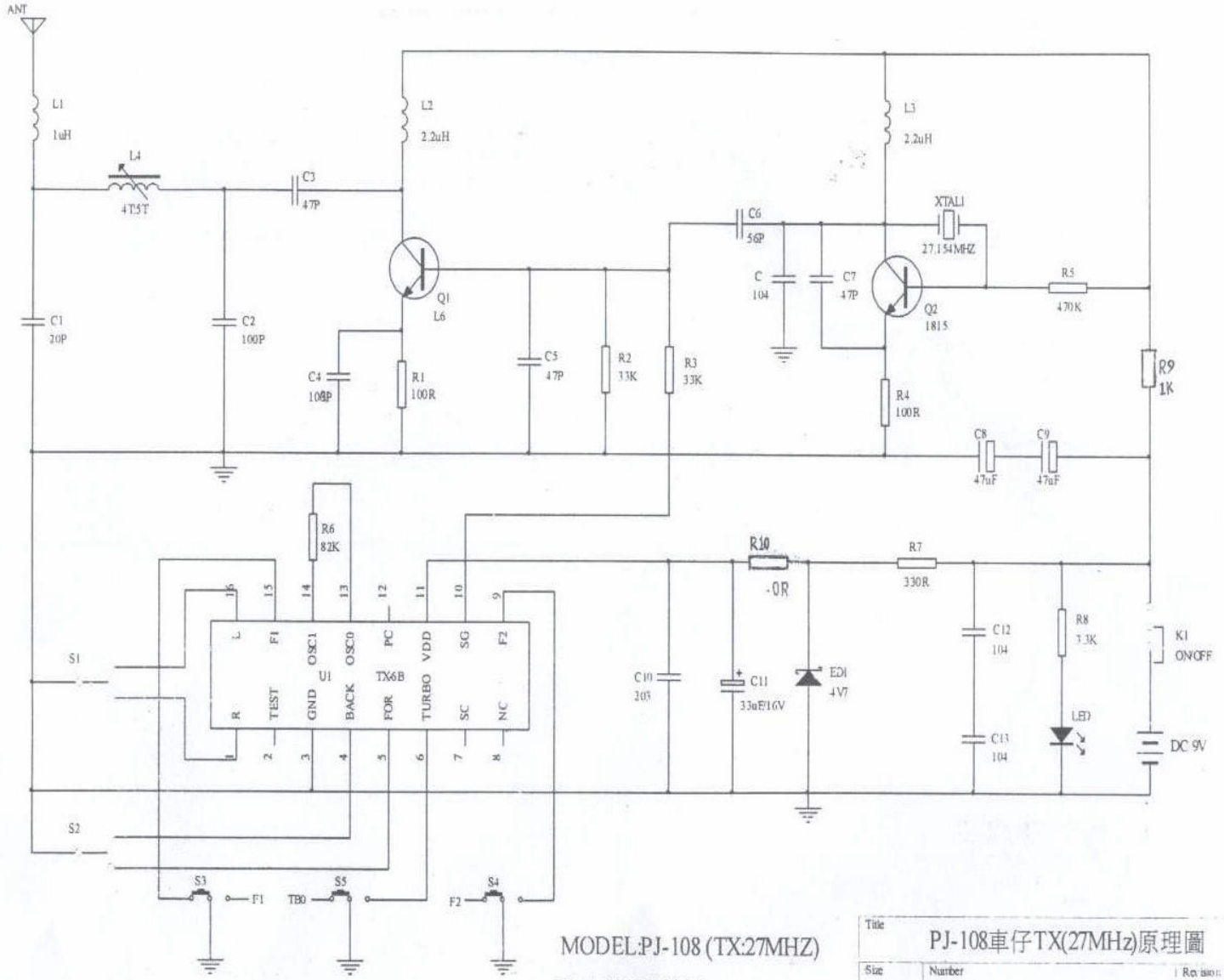


MODEL:PJ-108 (TX:27MHZ)

Date:03-20-2006

| Title | PJ-108車仔TX(27MHz)原理圖 | |
|---|---|---|
| Size A4 | Number | Revision |