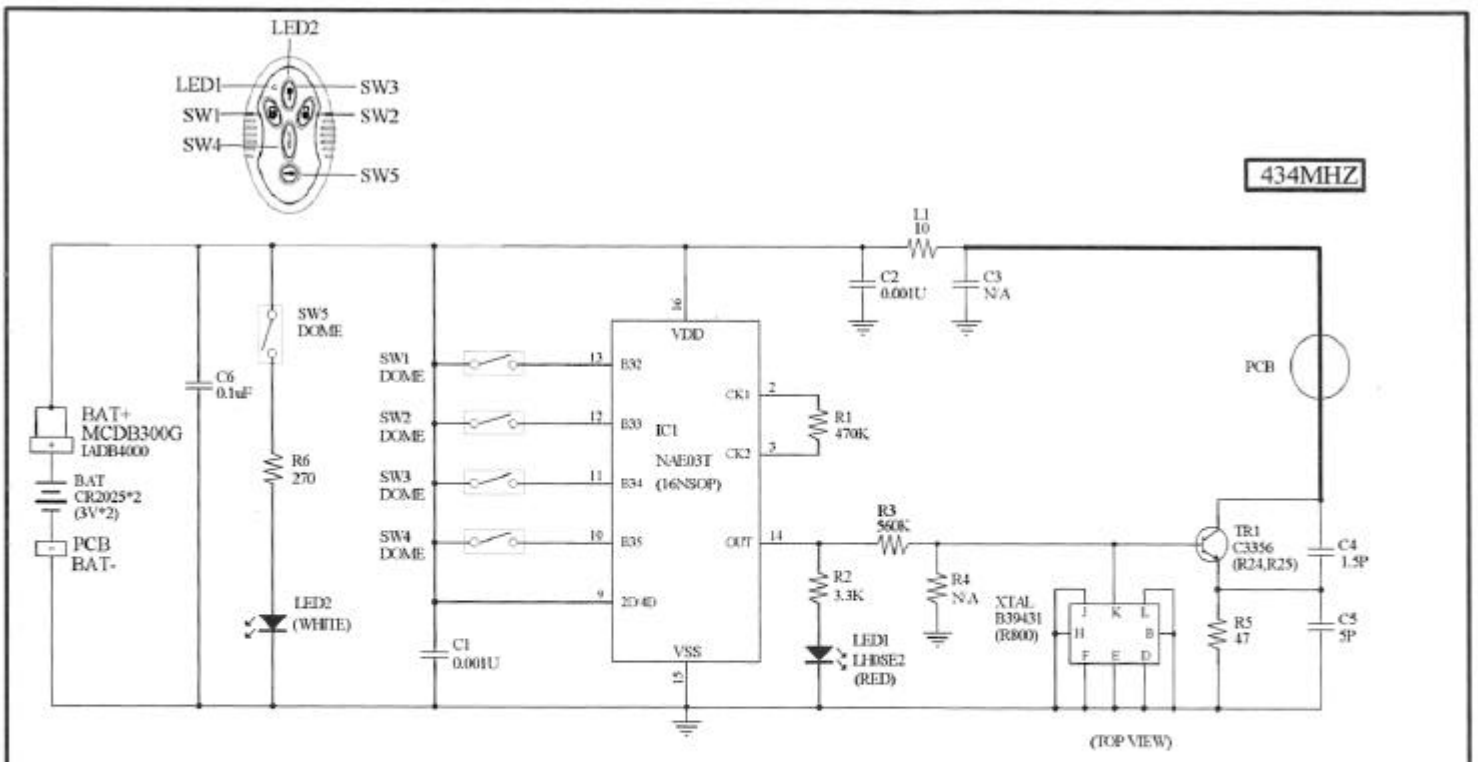

N51F045A

NUTEK CORPORATION			
NAME: ATDL			
APPD BY:		DATE:	
CHK BY:		DATE:	
DRN BY:	SHUFANG	DATE:	2005 03 16
SHEET 1 OF 1		REV:	4