3012NB
Rev.1
03/20/2003

Bottom of Handset:

Scale 1:1

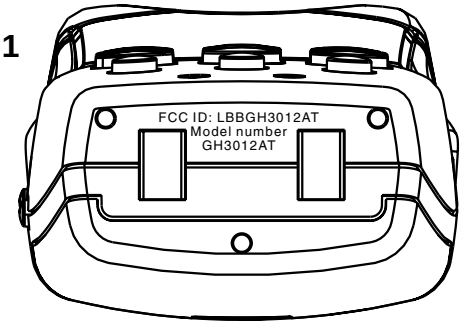

Bottom of Base unit:
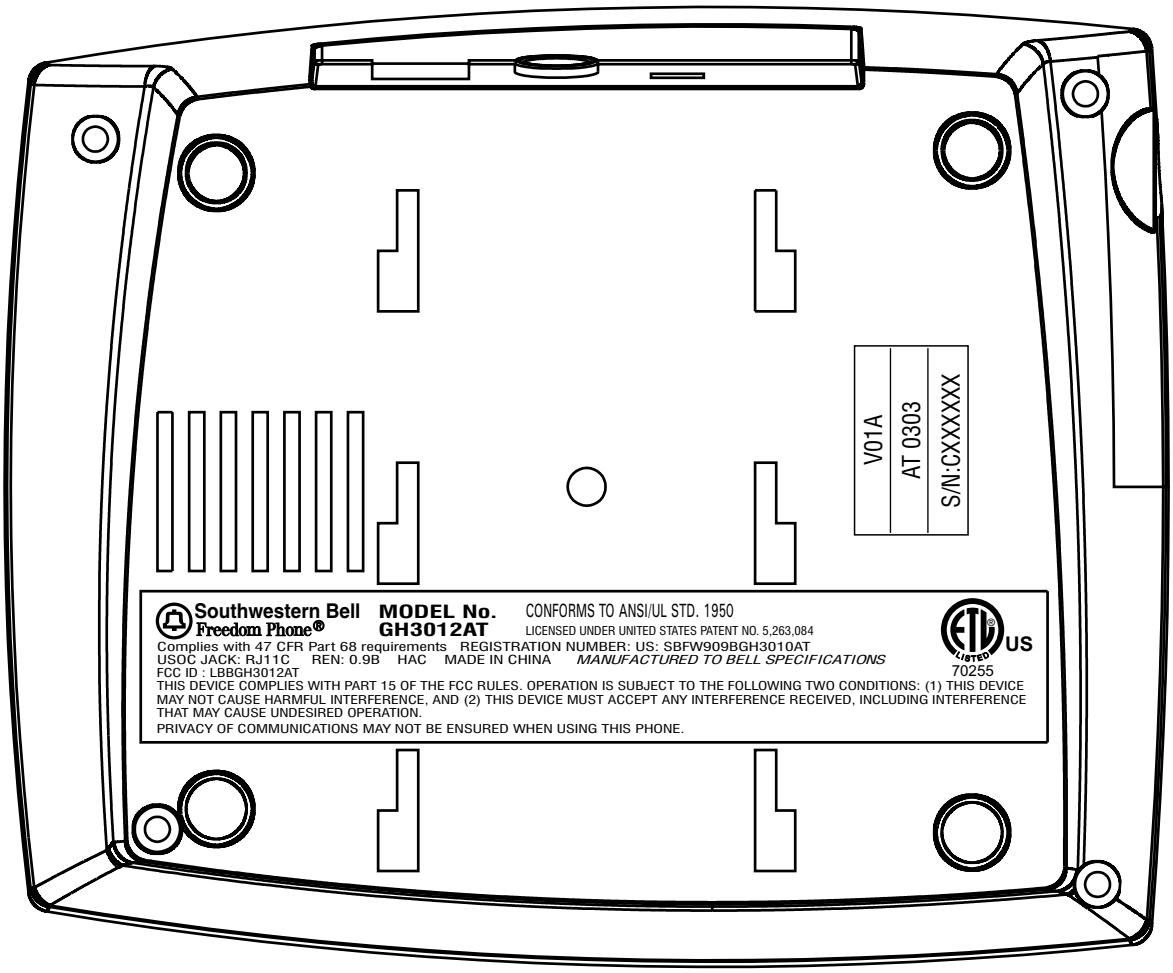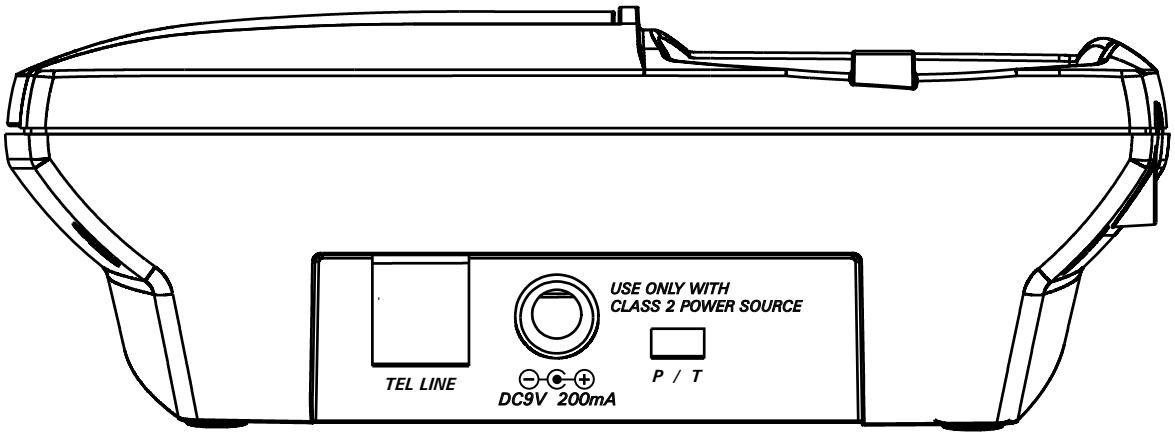
Label size: 120mm x 20mm