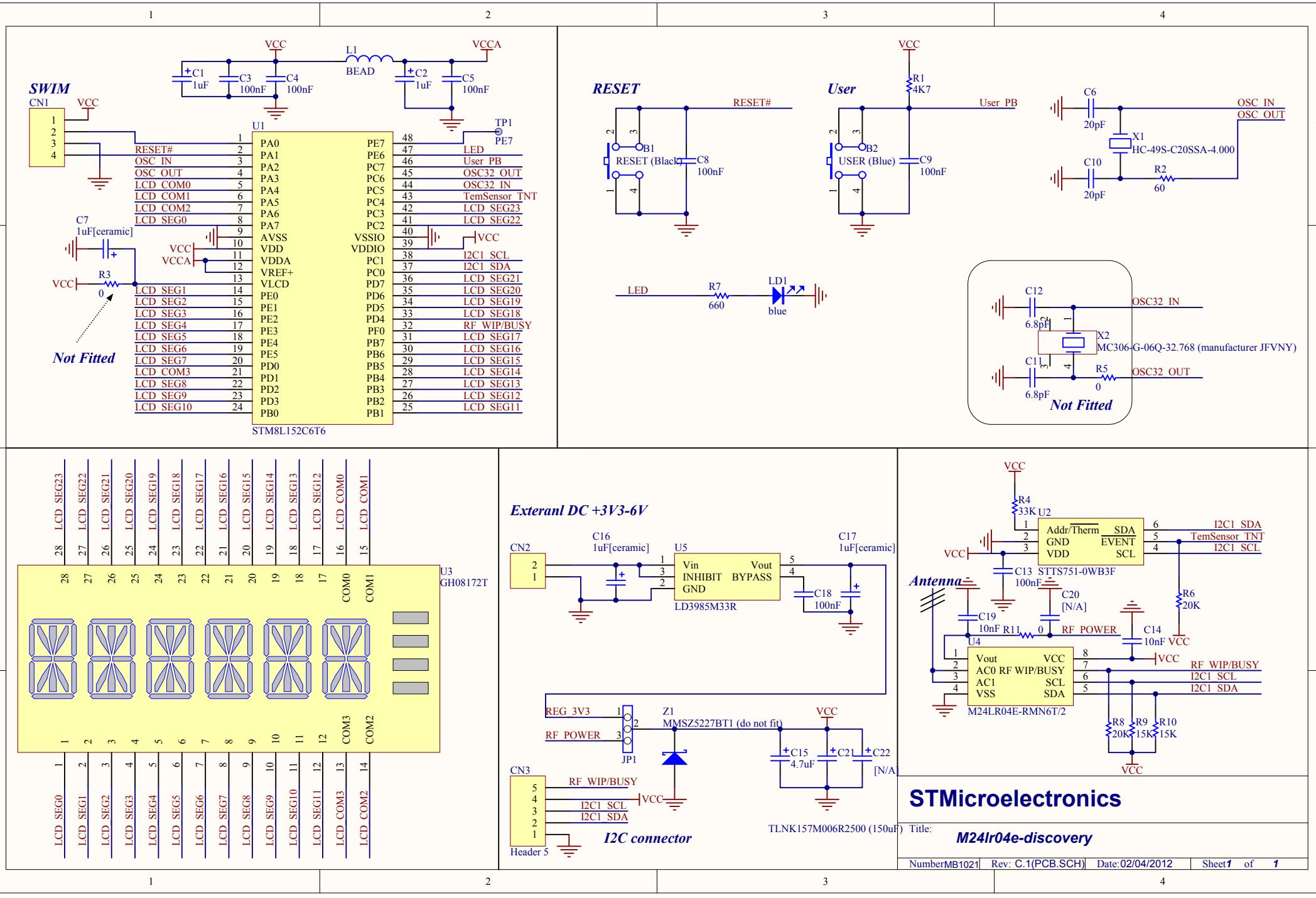
SWIM
CN1
VCC
VCCA
L1
BEAD
C1 1uF
C3 100nF
C4 100nF
C2 1uF
C5 100nF
U1
TP1
PE7
RESET#
OSC_IN
OSC_OUT
LCD_COM0
LCD_COM1
LCD_COM2
LCD_SEG0
PA0
PA1
PA2
PA3
PA4
PA5
PA6
PA7
AVSS
VDD
VDDA
VREF+
VLCD
PE0
PE1
PE2
PE3
PE4
PE5
PD0
PD1
PD2
PD3
PB0
PE7
PE6
PC7
PC6
PC5
PC4
PC3
PC2
VSSIO
VDDIO
PC1
PC0
PD7
PD6
PD5
PD4
PF0
PB7
PB6
PB5
PB4
PB3
PB2
PB1
LED
User_PB
OSC32_OUT
OSC32_IN
TemSensor_TNT
LCD_SEG23
LCD_SEG22
VCC
I2C1_SCL
I2C1_SDA
LCD_SEG21
LCD_SEG20
LCD_SEG19
LCD_SEG18
RF_WIP/BUSY
LCD_SEG17
LCD_SEG16
LCD_SEG15
LCD_SEG14
LCD_SEG13
LCD_SEG12
LCD_SEG11
LCD_SEG1
LCD_SEG2
LCD_SEG3
LCD_SEG4
LCD_SEG5
LCD_SEG6
LCD_SEG7
LCD_COM3
LCD_SEG8
LCD_SEG9
LCD_SEG10
C7 1uF[ceramic]
R3 0
Not Fitted
STM8L152C6T6
RESET
RESET#
B1
RESET (Black)
C8 100nF
User
R1 4K7
User_PB
B2
USER (Blue)
C9 100nF
C6 20pF
C10 20pF
X1 HC-49S-C20SSA-4.000
R2 60
LED
R7 660
LD1 blue
C12 6.8pF
C11 6.8pF
X2 MC306-G-06Q-32.768 (manufacturer JFVNY)
R5 0
Not Fitted
U3 GH08172T
COM0
COM1
COM3
COM2
Exteranl DC +3V3-6V
CN2
C16 1uF[ceramic]
U5
Vin
Vout
INHIBIT
BYPASS
GND
LD3985M33R
C17 1uF[ceramic]
C18 100nF
REG_3V3
RF_POWER
JP1
Z1 MMSZ5227BT1 (do not fit)
C15 4.7uF
C21
C22 [N/A]
TLNK157M006R2500 (150uF)
CN3
RF_WIP/BUSY
I2C1_SCL
I2C1_SDA
Header 5
I2C connector
R4 33K
U2
Addr/Therm
SDA
GND
EVENT
VDD
SCL
STTS751-0WB3F
C13 100nF
C20 [N/A]
Antenna
C19 10nF
R11 0
RF_POWER
C14 10nF
R6 20K
U4
Vout
VCC
AC0 RF WIP/BUSY
AC1
SCL
VSS
SDA
M24LR04E-RMN6T/2
R8 20K
R9 15K
R10 15K
STMicroelectronics
Title:
M24lr04e-discovery
Number MB1021
Rev: C.1(PCB.SCH)
Date: 02/04/2012
Sheet 1 of 1