SPECIFICATION

深圳市大显科技有限公司

Shenzhen Daxian Technology Co., Ltd.

中山悦辰 HK-C1110 BT 天线组件

Richsound HK-C1110 BT Antenna assembly

产 品 规 格 书

Product Specification

客 户 connection	中山悦辰 Richsound	频 段 frequency range	2400 ~ 2500MHz
项目名称 entry name	HK-C1110	版 本 edition	V02
物料编号 Material No	1K-C1110-120	颜 色 Color	蓝色+黑色 Blue+Black
客户料号 Customer Item Number	**101000542**		
R F 设计 R F Design	沈 川 Chuan.Shen	结构设计 Structural Design	闭业智 YeZhi.Bi
品质经理 Quality Manager	胡子寅 Ziyin.Hu	技术总监 Technical Director	张 磊 Lei.Zhang
日 期 Date	2023-03-31		

深圳市大显科技有限公司 承认书专用章

客户确认：
Customer confirmation:

装配是否符合贵司要求：☐OK ☐NG
Whether the assembly meets your company's requirements：☐OK ☐NG

深圳市大显科技有限公司

深圳市龙岗区布吉镇吉华路 513 号上水径村（国防培训基地对面）达成工业园综合楼 7 楼
TEL:0755-28576002
FAX:0755-84276383

上海分部：上海市张江高科技园区集成电路产业区龙东大道 3000 号 8 号楼 201 室
TEL:021-61630552
FAX:755-84276383

Shenzhen DaXian Technology Co., Ltd.

Buji Town, Longgang District, Shenzhen, China Jihua Road 513, Shangshuijing Village (opposite the national defense training base) Dacheng Industrial Park, Building 7。
TEL:0755-28576002
FAX:0755-84276383

Room201, Building8, LongDongRoad3000#, Semiconductor Industry Park, ZhangJiang Hitech Zone, ShangHai
TEL:021-61630552
FAX:755-84276383

变更履历
Revision history

版本号 Version number	变更内容 Change content	变更理由 Reason for change	发起变更方 Originating Party	日期 Date	修改人 Modified by
V1.0	创建 found			2023-03-31	
V1.1					

Confidentiality requirements

Shenzhen Daxian Technology Co., Ltd. already possesses the information provided by the proprietary technology, which should be strictly confidential and not allowed to be disclosed to any person or company without the prior written consent of Shenzhen Daxian Technology Co., Ltd

索　引
Indexes

一、项目说明 Project Description.....4

二、 BT 天线 antenna.....4

1、 规格 specifications.....4

1.1 电气规格标准 Electrical specifications and standards.....5

1.1.1 电性能指标 Electrical performance index.....5

1.1.2 天线位置布局 Antenna Location Layout.....5

1.2 结构规格标准 Structural specifications and standards.....6

1.2.1 天线组成 Antenna composition.. 6

2、测试环境 testing environment.....6

3、测试 test. 7

3.1 驻波(VSWR)的测试 Test of standing wave (VSWR).....7

3.1.1 测试连接 Test connection.....7

3.2 效率、功率（TRP）、灵敏度（TIS）的测试 Testing of efficiency, power (TRP), sensitivity (TIS).....7

3.2.1 测试的场地 Test site.....7

3.2.2 测试的仪表 Tested Instruments.....7

3.2.3 测试数据 test data.....7-8

4、VSWR 参数图 Parameter diagram.....8

5、无源场型图 Passive field pattern diagram.....9

6-6.1 天线有源场型图-TRP&TIS&39 信道 Antenna active field pattern diagram - TRP&TIS&39 channel.....9

7、天线隔离度 antenna isolation.....10

8-8.1、户外拉距测试 Outdoor Pull distance test.....11-12

9、结论 conclusion.....12

三、工程图 schedule drawing.....13

Confidentiality requirements

Shenzhen Daxian Technology Co., Ltd. already possesses the information provided by the proprietary technology, which should be strictly confidential and not allowed to be disclosed to any person or company without the prior written consent of Shenzhen Daxian Technology Co., Ltd

一 项目说明 Project Description

客 户 名： **Customer Name：**	中山悦辰 Richsound
整机类型： **Type of complete machine：**	音箱 loudspeaker box
天线频段： **Antenna band：**	2400 ~ 2500MHz
天线形式： **Antenna form：**	FPC+同轴线+线材海绵 FPC+coaxial line+wire sponge
馈电形式： **Feed form：**	焊接 weld
馈脚数量： **Number of feed legs：**	两个 Two
硬件版本： **Hardware version：**	/

二 BT 天线组件 Antenna assembly

1 规格 specifications

本报告主要提供 HK-C1110 项目天线的各项电气和结构性能参数的测试状况。下图为大显设计的天线图片。

This report mainly provides the testing status of various electrical and structural performance parameters of the antenna for the HK-C1110 project. The following image shows an antenna with a large display design.

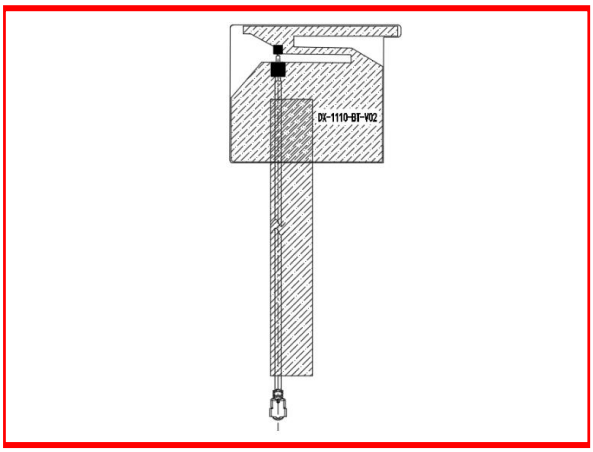

天线外观图

antenna appearing diagram

Confidentiality requirements

Shenzhen Daxian Technology Co., Ltd. already possesses the information provided by the proprietary technology, which should be strictly confidential and not allowed to be disclosed to any person or company without the prior written consent of Shenzhen Daxian Technology Co., Ltd

1.1 电气规格标准 Electrical specifications and standards

1.1.1 电性能指标 Electrical performance index

天线工作频段在 **2400 ~ 2500 MHz。** 下表是大显设计和量产天线的电性能的指标.

The operating frequency band of the antenna is between 2400 and 2500 MHz. The following table shows the electrical performance indicators of large display design and mass production antennas.

Frequency Range	Frequency (MHz)	VSWR
BT	**2400 ~ 2500**	**≤ 2**

Confidentiality requirements

Shenzhen Daxian Technology Co., Ltd. already possesses the information provided by the proprietary technology, which should be strictly confidential and not allowed to be disclosed to any person or company without the prior written consent of Shenzhen Daxian Technology Co., Ltd

2 结构规格标准 Structural specifications and standards

1.2.1 天线组成 Antenna composition

天线主要是由 FPC+同轴线+线材海绵 组成。
The antenna is mainly composed of FPC+coaxial line+wire sponge.

2、 测试设备 The Equipment of Active Test

Satimo 3D Chamber　6×4×4(m)

Agilent 8960 E5515c

Network analyzer-R&S ZVL

图 2

Figure 2

Confidentiality requirements
Shenzhen Daxian Technology Co., Ltd. already possesses the information provided by the proprietary technology, which should be strictly confidential and not allowed to be disclosed to any person or company without the prior written consent of Shenzhen Daxian Technology Co., Ltd

3 测试 test

3.1 驻波(VSWR)的测试 Test of standing wave (VSWR)

3.1.1 测试连接：VSWR 测试装置依次的连接为：R&S ZVL 网络分析仪→测试线→测试治

Test connection: The VSWR test device is sequentially connected as follows: R&S ZVL network analyzer → test line → test fixture

实测(附图)Actual measurement (attached drawing)

3.2 增益及效率、功率（TRP）、灵敏度（TIS）的测试

Gain and efficiency, power (TRP), sensitivity (TIS) testing

3.2.1 测试的场地 Test site：

大显微波暗室 。测试频率范围为 400MHz—6GHz，静区范围为 50cm 周圆，反射率小于-50 dB。

Large display microwave anechoic chamber. The test frequency range is 400MHz - 6GHz, the static zone range is 50cm circumferential, and the reflectivity is less than - 50dB.

3.2.2 测试的仪表 Tested Instruments：

R&S ZVL 网络分析仪、Agilent8960 E5515C、标准喇叭天线、法国 SATIMO-SG24SYSTEM 系统、打印机等。

R&S ZVL network analyzer, Agilent 8960 E5515C, standard horn antenna, French SATIMO-SG24SYSTEM system, printer, etc.

3.2.3 测试数据 ：在微波暗室中，测试的功率和灵敏度相关的数值如下表

Test data: In a microwave anechoic chamber, the values related to the power and sensitivity tested are shown in the table bel

OTA 有源测试 OTA Active Test：

Band	CH	TPR	TIS
BT	0	6.29	-90.31
	39	6.43	-90.46
	78	6.62	-90.61

Confidentiality requirements

Shenzhen Daxian Technology Co., Ltd. already possesses the information provided by the proprietary technology, which should be strictly confidential and not allowed to be disclosed to any person or company without the prior written consent of Shenzhen Daxian Technology Co., Ltd

无源效率&增益 Passive efficiency&gain：

Freq (MHz)	Effi (%)	Effi (dB)	Gain (dBi)
2400	52.71	-2.78	1.49
2410	53.11	-2.75	1.67
2420	54.74	-2.62	1.83
2430	55.06	-2.59	2.08
2440	55.79	-2.53	2.22
2450	56.75	-2.46	2.18
2460	55.42	-2.56	1.11
2470	54.15	-2.66	1.38
2480	54.43	-2.64	1.26
2490	53.46	-2.72	1.06
2500	52.68	-2.78	1.63

4、VSWR 参数图 VSWR parameter diagram

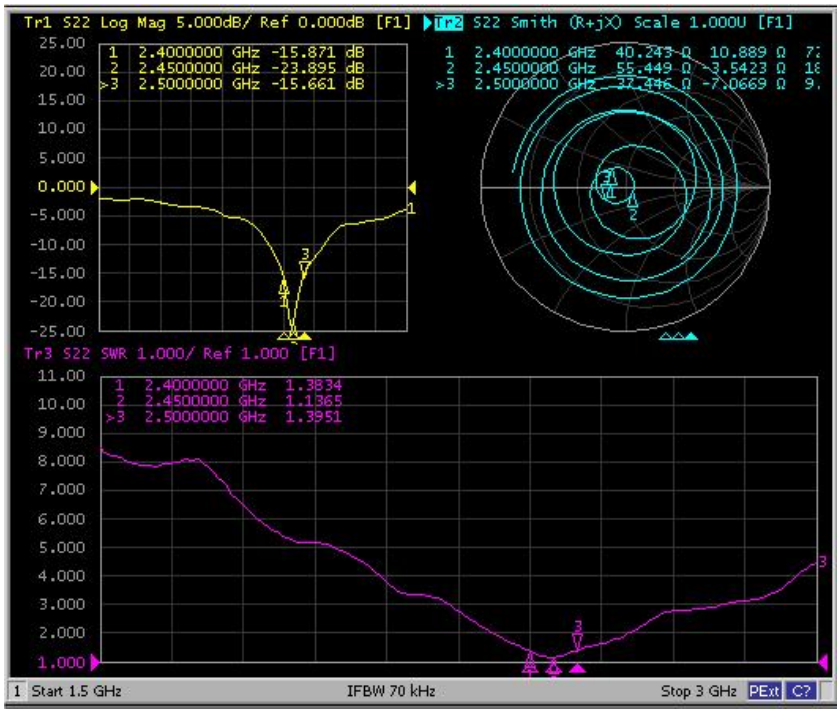

Confidentiality requirements

Shenzhen Daxian Technology Co., Ltd. already possesses the information provided by the proprietary technology, which should be strictly confidential and not allowed to be disclosed to any person or company without the prior written consent of Shenzhen Daxian Technology Co., Ltd

5、无源场型图-2450MHz

Passive Field Pattern Diagram - 2450MHz

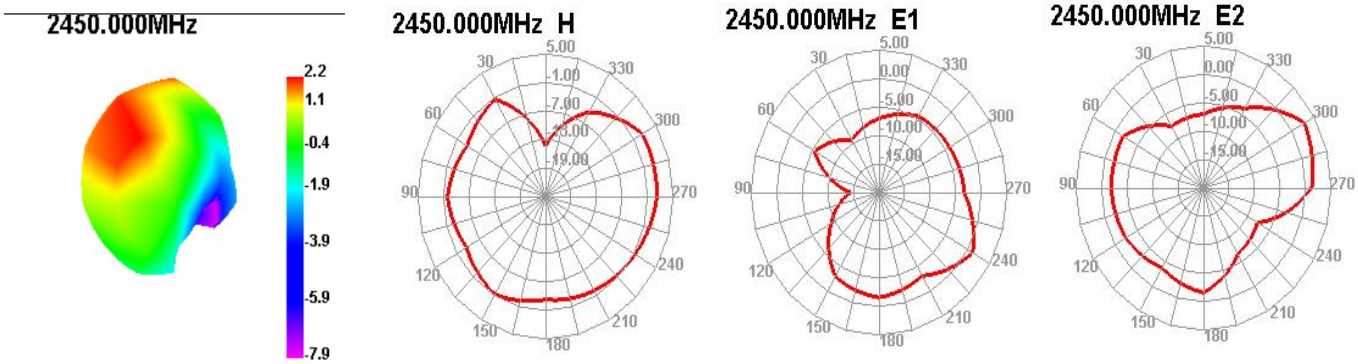

6、天线有源场型图-TRP&39 信道

Antenna active field pattern diagram - TRP&39 channel

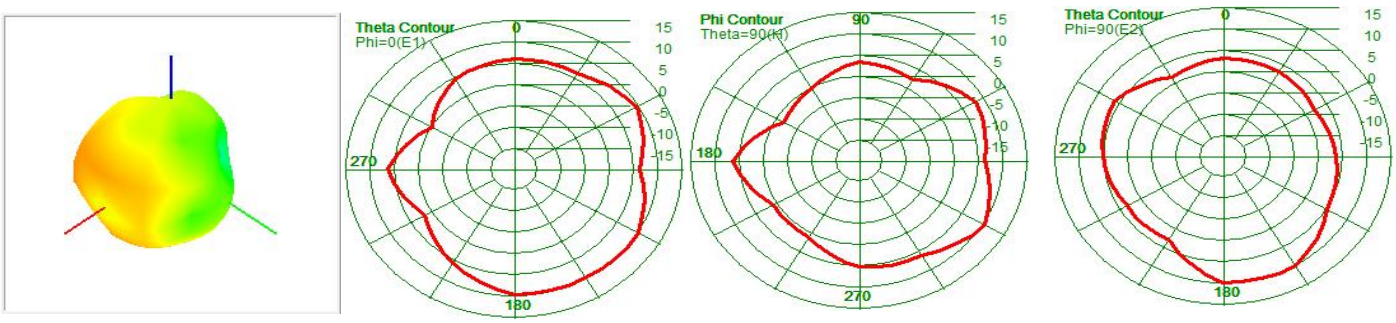

6.1、天线有源场型图-TIS&39 信道

Antenna active field pattern diagram - TIS&39 channel

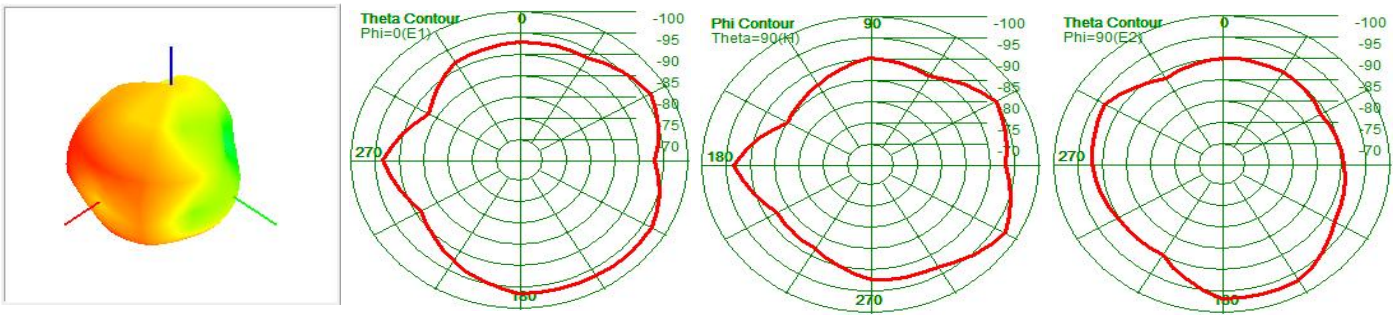

Confidentiality requirements

Shenzhen Daxian Technology Co., Ltd. already possesses the information provided by the proprietary technology, which should be strictly confidential and not allowed to be disclosed to any person or company without the prior written consent of Shenzhen Daxian Technology Co., Ltd

7、天线隔离度 antenna isolation

BT and WIFI 0

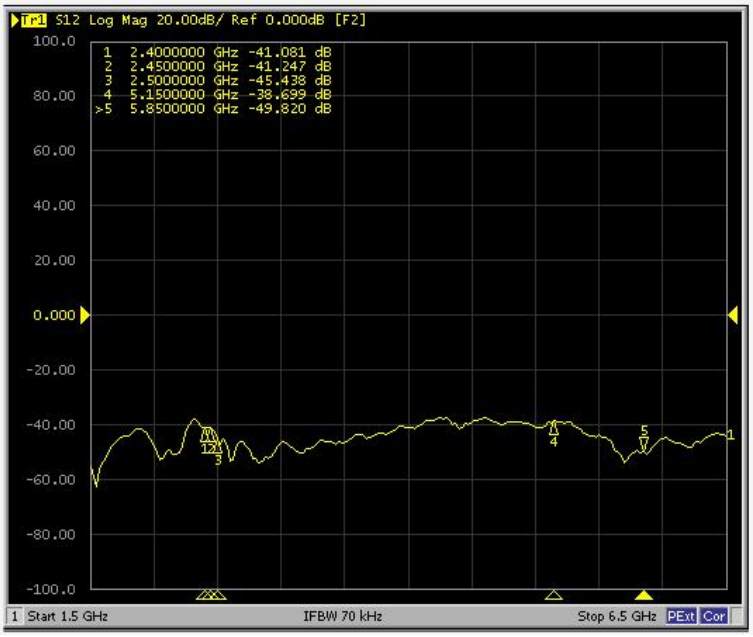

BT and WIFI 1

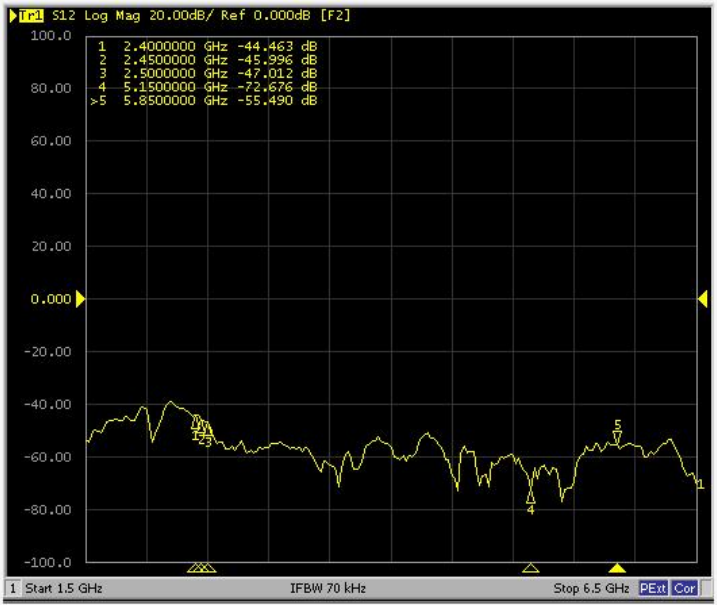

WIFI 0 and WIFI 1

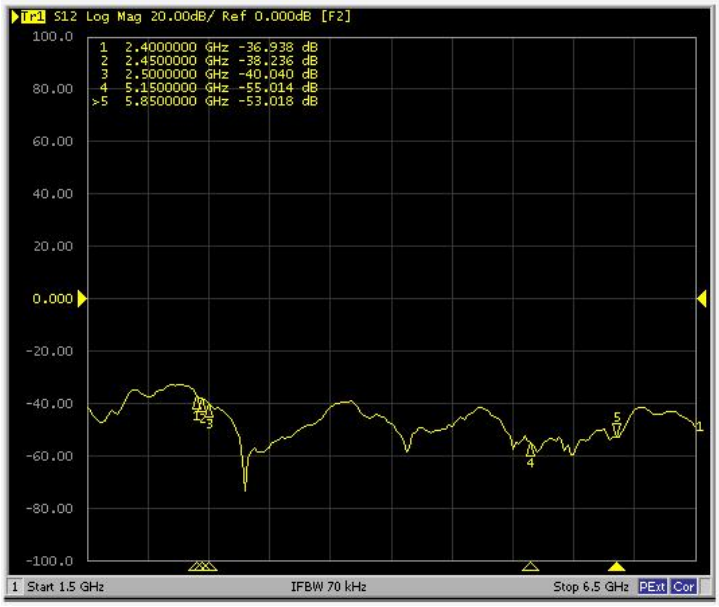

Confidentiality requirements

Shenzhen Daxian Technology Co., Ltd. already possesses the information provided by the proprietary technology, which should be strictly confidential and not allowed to be disclosed to any person or company without the prior written consent of Shenzhen Daxian Technology Co., Ltd

8、户外拉距测试 Outdoor pull distance test

测试时间Test time：2023/01/05
测试场地：深圳市宝安区鹤洲豪庭附近
test site:Near Hezhou Haoting, Bao'an District, Shenzhen
测试手机test mobile：Iphone 14 Pro
配网手机Distribution phone：Xiaomi MIX 2
配网APPDistribution Network APP:JBL ONE
测试路由器Test Router：ASUS-RT-AC86U

测试方向 Testing direction	前 Front	后 Behind	左 Left	右 Right
	测试距离 Test distance			
BT	100m	100m	100m	100m
WIFI 2.4G	200m	200m	200m	200m
WIFI 5.8G	255m	255m	255m	255m

Confidentiality requirements
Shenzhen Daxian Technology Co., Ltd. already possesses the information provided by the proprietary technology, which should be strictly confidential and not allowed to be disclosed to any person or company without the prior written consent of Shenzhen Daxian Technology Co., Ltd

8.1、户外拉距测试 Outdoor pull distance test

测试时间Test time: 2023/01/06
测试场地：中山市悦辰公司测试场地
test site:Testing site of Yuechen Company in Zhongshan City
测试手机test mobile: Iphone 14 Pro
配网手机Distribution phone: xiaomi MIX 2
配网APP Distribution Network APP:JBL ONE
测试路由器Test Router: ASUS-RT-AC86U

测试方向 Testing direction	前 Front	后 Behind	左 Left	右 Right
	测试距离 Test distance			
BT	80m	90m	80m	80m
WIFI 2.4G	165m	170m	165m	165m
WIFI 5.8G	250m	250m	250m	250m

9、结论 conclusion

此天线是在客户提供样机基础上设计，电参数和结构性能已达到技术要求，请确认！

This antenna is designed based on the prototype provided by the customer. The electrical parameters and structural performance have met the technical requirements, please confirm!

Confidentiality requirements

Shenzhen Daxian Technology Co., Ltd. already possesses the information provided by the proprietary technology, which should be strictly confidential and not allowed to be disclosed to any person or company without the prior written consent of Shenzhen Daxian Technology Co., Ltd

	0~10	10~30	30~50	50~	角度	○	◎	⊥	▱
	0.05	0.10	0.15	0.20	1°	0.02	0.02	0.03	0.05

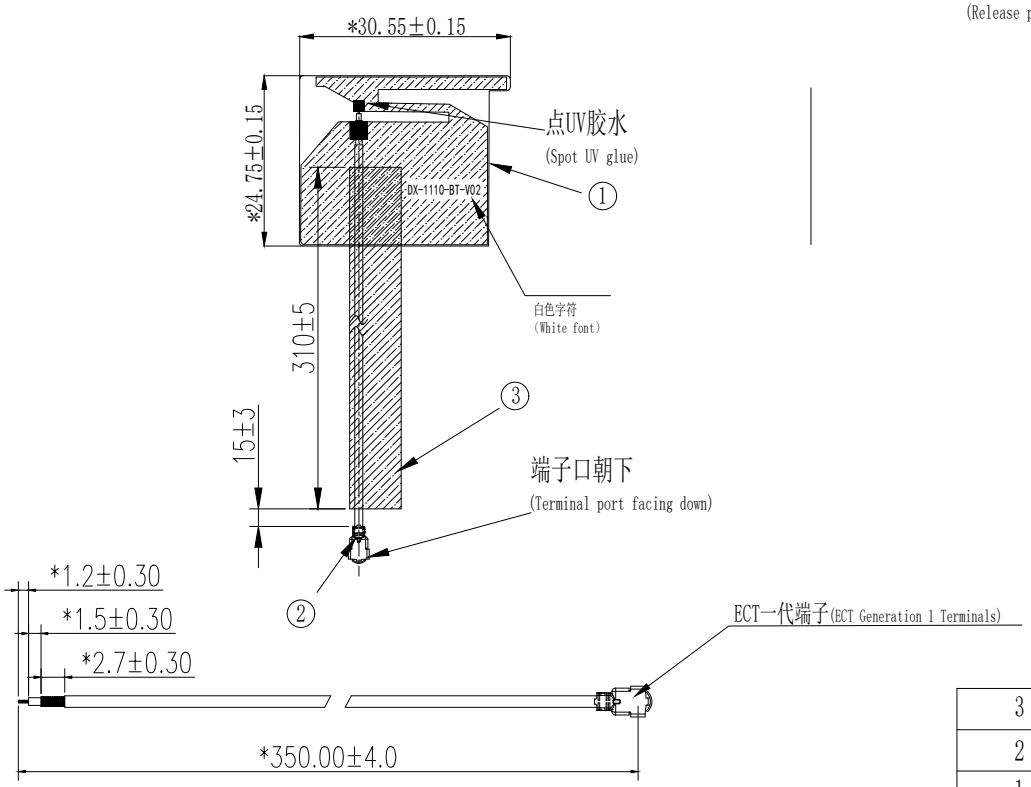

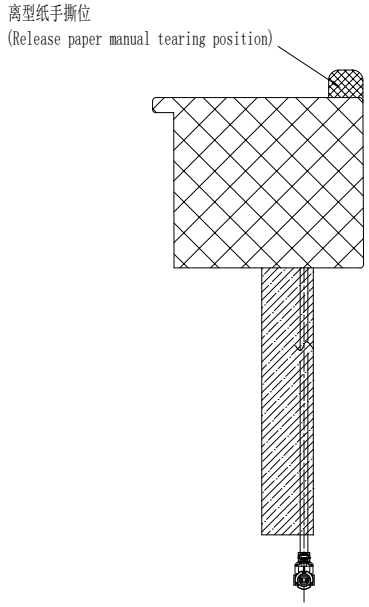

技术要求:
(technical requirement:)

1. "*"为重点尺寸 ;
(1. "*" is the key dimension;)
2. 未标注尺寸请依图纸;
(2. Please refer to the drawing for unspecified dimensions;)
3. 不可有虚焊、漏焊、短线、断线等操作不良;
(3. There should be no poor operation such as faulty soldering, missing soldering, short wires, broken wires, etc;)
4. 符合 RoHS 要求 .
(4. Meet RoHS requirements.)

序号(serial number)	零件名称(Part Name)	材质(material)	颜色(colour)	备注(Note)
3	线材海绵(Cable sponge)	PUF	黑色(black)	
2	端子同轴线(RF connector)	Cable	蓝色(blue)	
1	FPC	Electrolytic copper PI	黑色(black)	

版 本(edition)	描述(describe)	日期(date)	备注(Note)
A	首次发行(Initial Issue)	2023.03.31	

深 圳 大 显 科 技 有 限 公 司
Shenzhen Topant Technology Co., Ltd.

机型(Machine model)	HK-C1110	产品颜色(Product Color)	黑色(black)	日期(date)	2023/03/31
项目编码(Project Code)	CK-C1110-120	模面处理(Mold surface treatment)	NA	结构(MD)	闭业智
零件名称(Part Name)	BT天线(BT antenna)	单位(unit) mm	比例(scale) 1:1	射频(RF)	沈川
零件编码(Part Number)	1K-C1110-120	第三视角 (Third perspective)		审核(check)	吴锡欢
材质(material)	FPC+sponge+RF connector			批准(ratify)	张磊
保存路径(Save Path)				当前版本(current version)	A