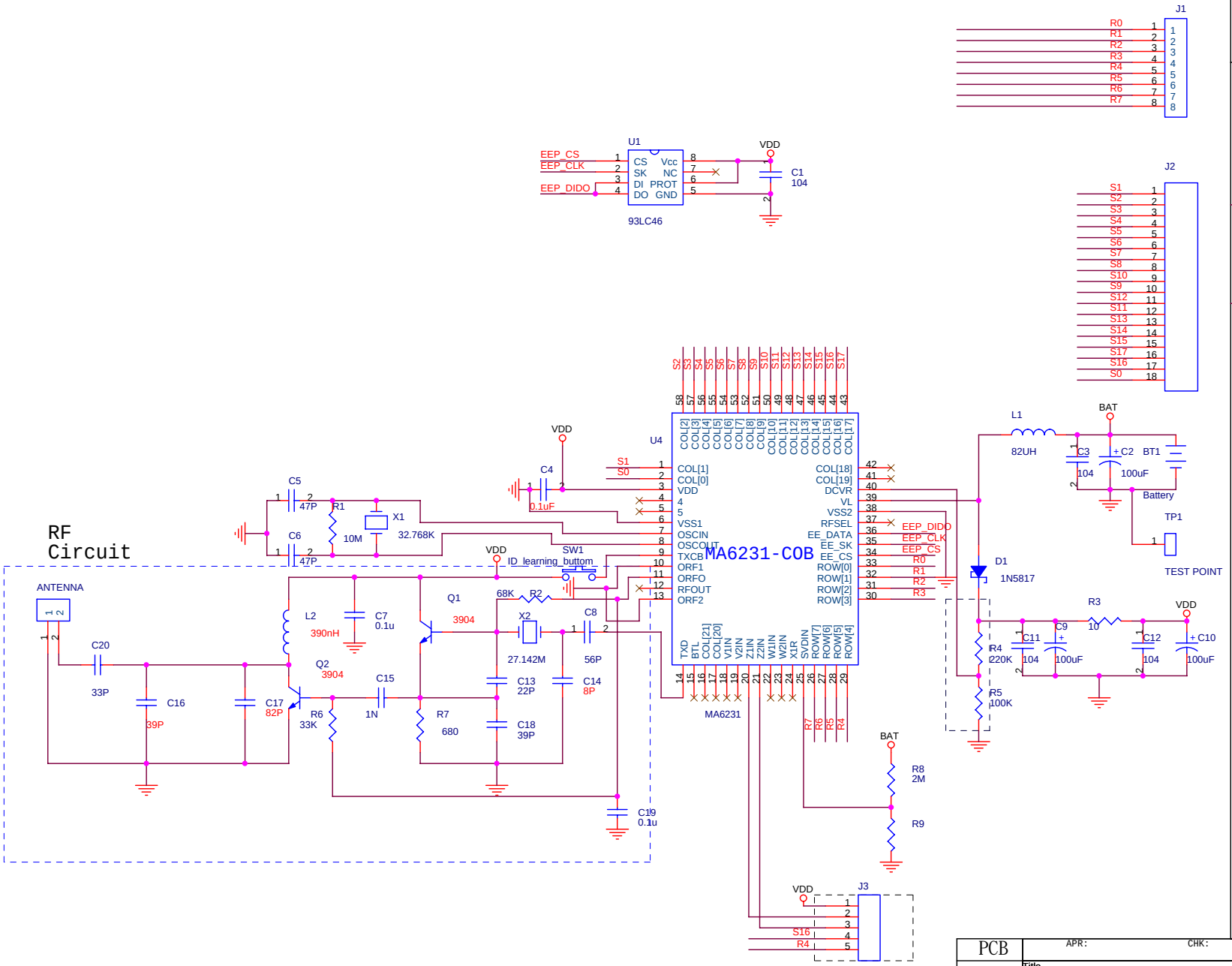

Date:2004-07-28
Rev:1
New

Date:2004-08-17
Rev:2
Remove
R9,R10,R11,R12
Add
MA6231第四,五腳接地

Date:2004-08-20
Rev:3
change J3 第五腳
R3 to R4

Date:2004-08-20
Rev:4
更換包裝爲COB

PCB	APR:	CHK:	DWG:
	Title <Title> TwinTouch LuxeMate Scroll		
	Size B	Document Number <Doc> CKT:20310005101PCB:10230056100	Rev 3
	Date: Tuesday, December 28, 2004	Sheet 1 of 1	