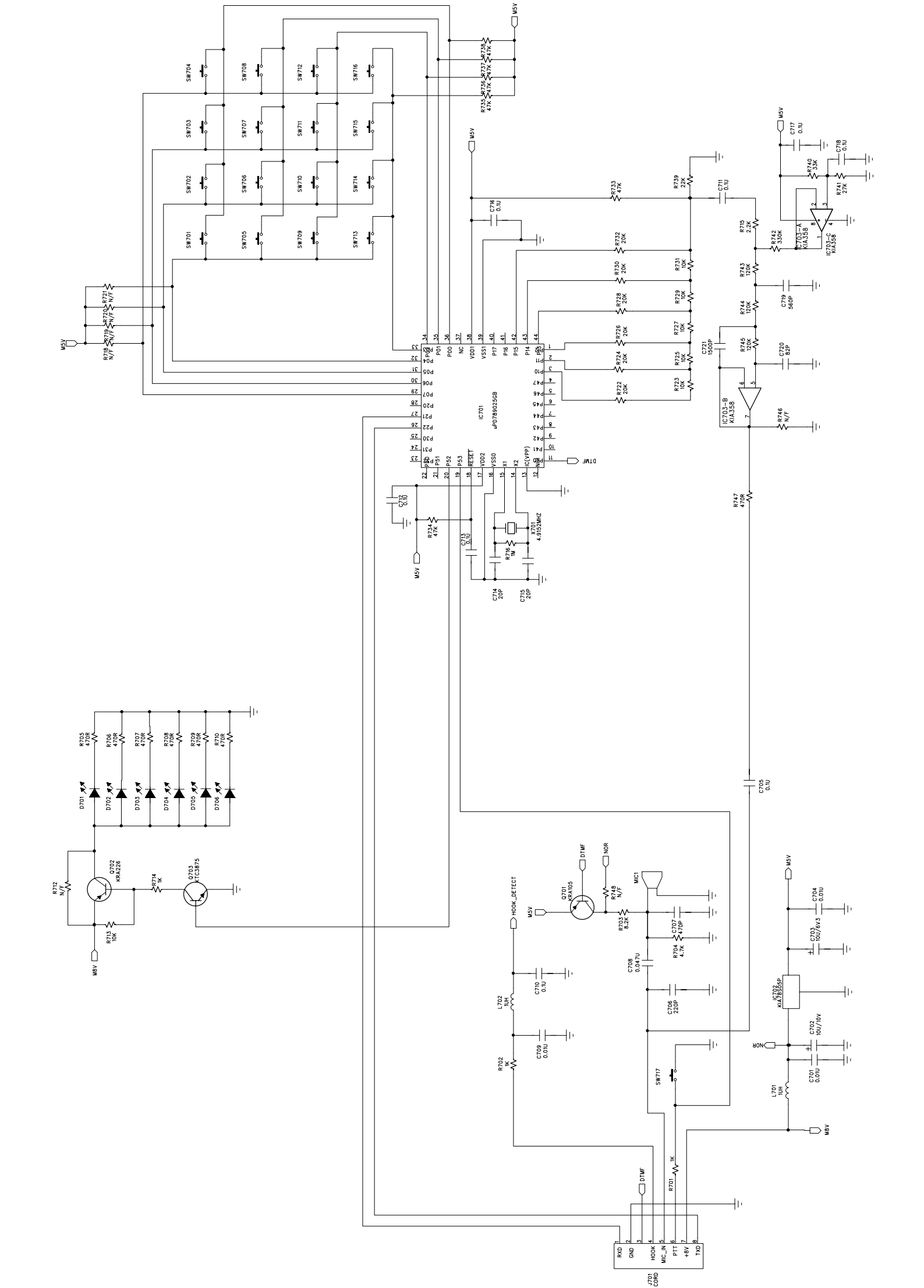
IC701
uPD789025GB
IC703-A
KIA358
IC703-B
KIA358
IC703-C
KIA358
IC702
KIA7805P
Q701
KRA105
Q702
KRA226
Q703
KTC3875
X701
4.9152MHZ
J701
CORD
RXD
GND
HOOK
MIC_IN
PTT
+BV
TXD
DTMF
NOR
HOOK_DETECT
M5V
M8V
MIC1
SW717

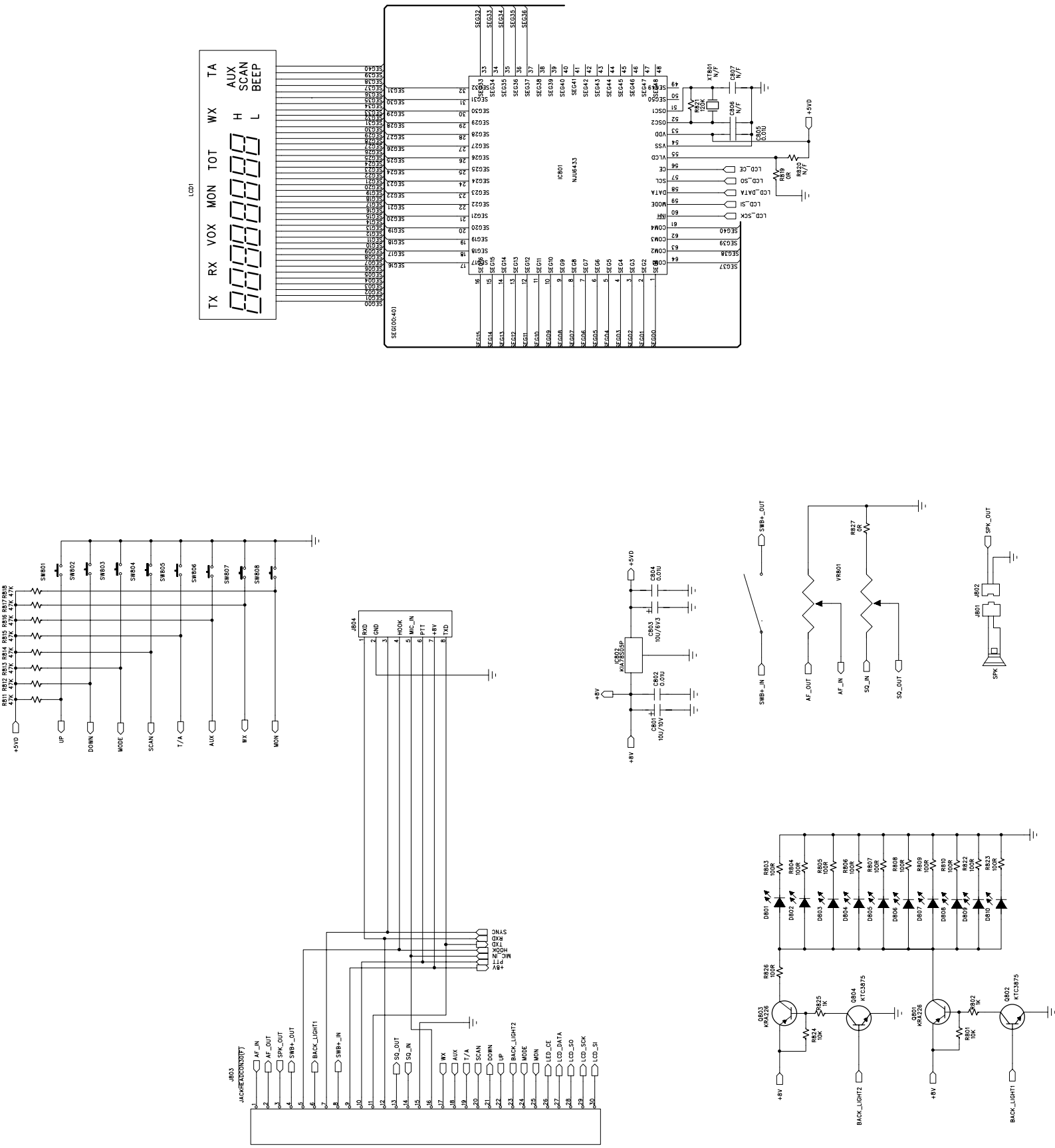
LCD1
TX RX VOX MON TOT WX TA
H L AUX SCAN BEEP
IC801
NJU6433
SEG00-40
X7801 N/F
C807 N/F
C806 N/F
C805 0.01U
R820 N/F
R819 0R
+5VD
LCD_CE
LCD_SO
LCD_DATA
LCD_SI
LCD_SCK
R811 R812 R813 R814 R815 R816 R817 R818 47K 47K 47K 47K 47K 47K 47K 47K
SW801 SW802 SW803 SW804 SW805 SW806 SW807 SW808
+5VD UP DOWN MODE SCAN T/A AUX WX MON
J804
RXD GND HOOK MIC_IN PTT +8V TXD
+5VD PTT MIC_IN HOOK TXD RXD SYNC
J803
JACK(HEADSOUT)
AF_IN AF_OUT SPK_OUT SWB+_OUT BACK_LIGHT1 SWB+_IN SQ_OUT SQ_IN WX AUX T/A SCAN DOWN UP BACK_LIGHT2 MODE MON LED_CE LCD_DATA LCD_SO LCD_SCK LCD_SI
+8V
C801 10U/10V
C802 0.01U
IC803 KIA78R33P
C803 10U/6V3
C804 0.01U
SWB+_IN
SWB+_OUT
AF_OUT
AF_IN
SQ_IN
SQ_OUT
VR801
R827 0R
J801
J802
SPK
SPK_OUT
D801 D802 D803 D804 D805 D806 D807 D808 D809 D810
R803 R804 R805 R806 R807 R808 R809 R810 R822 R823 100R 100R 100R 100R 100R 100R 100R 100R 100R 100R
R826 100R
Q803 KRA226
R825 1K
Q804 KTC3875
R824 10K
BACK_LIGHT2
Q801 KRA226
R802 1K
Q802 KTC3875
R801 10K
BACK_LIGHT1

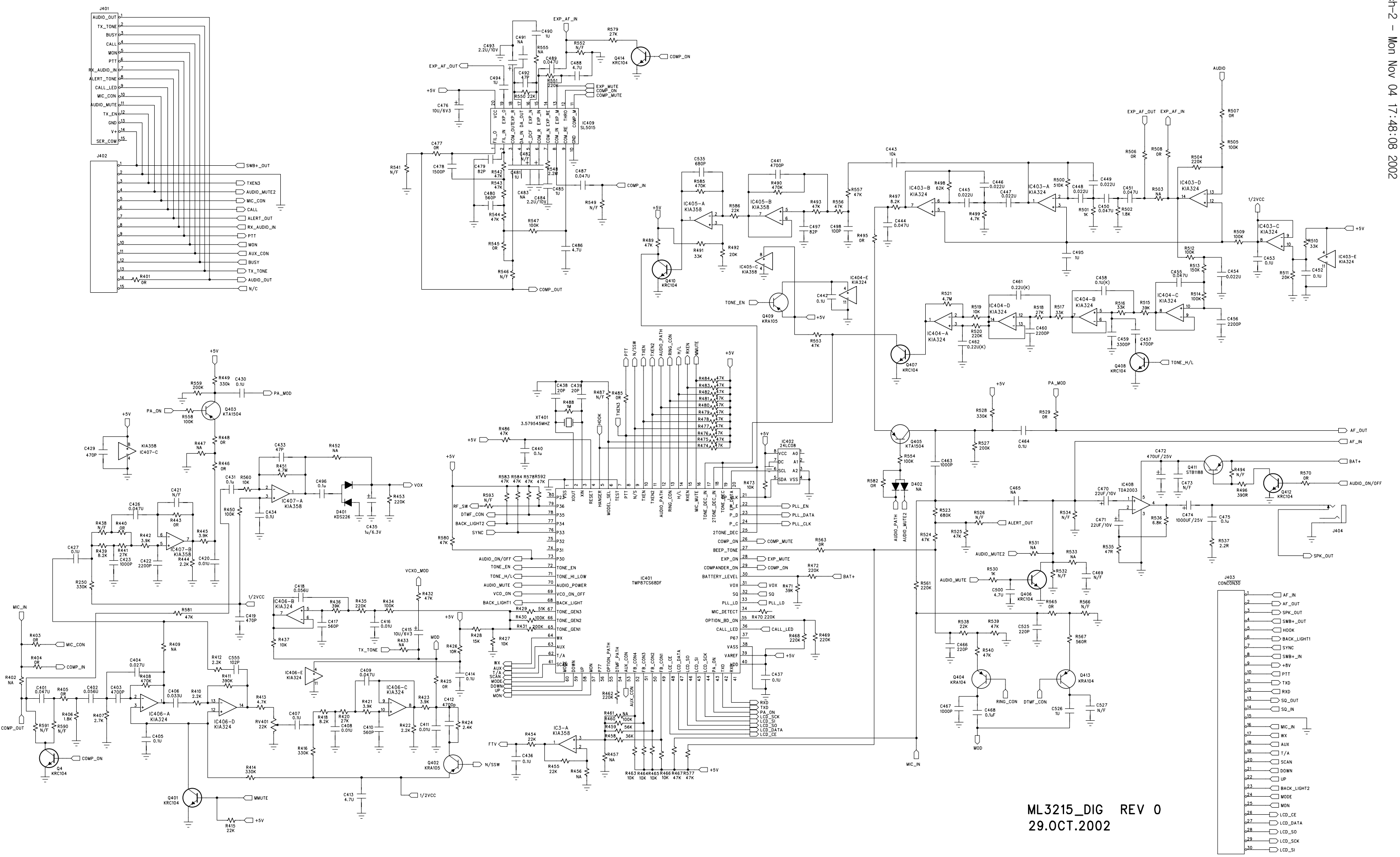

ML3215_DIG REV 0
29.OCT.2002

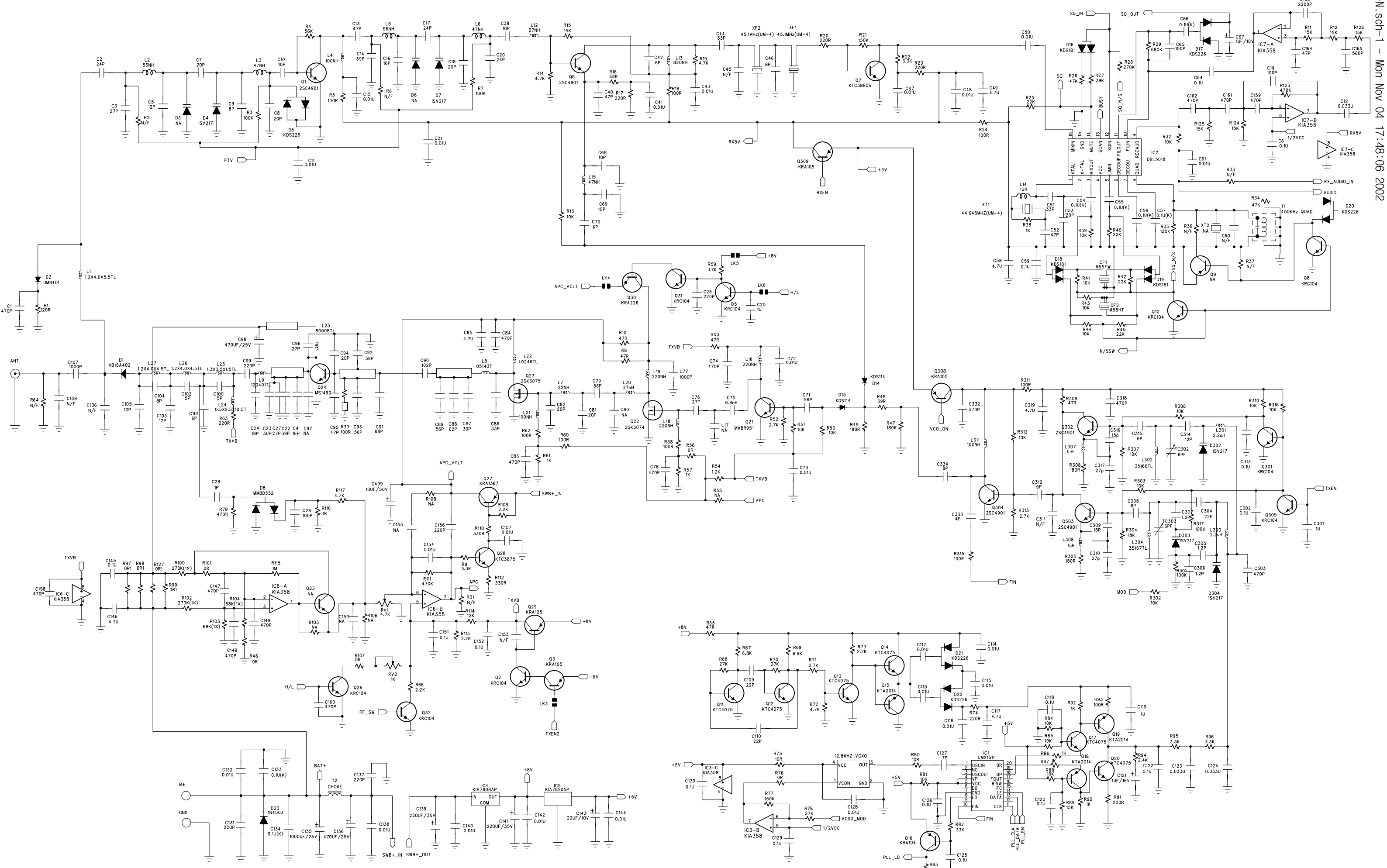

ML3215_RF REV 0
29.OCT.2002

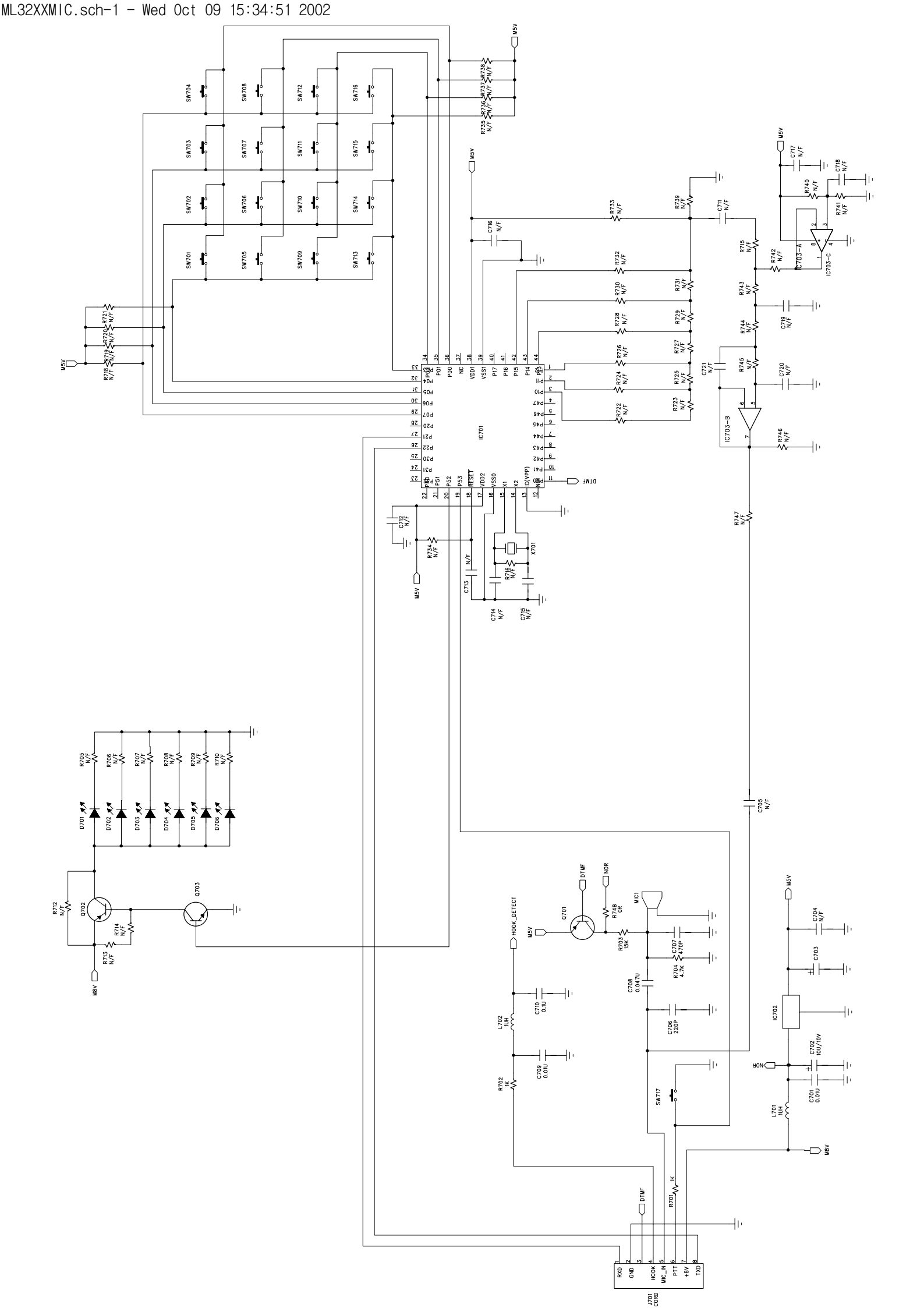
SW701
SW702
SW703
SW704
SW705
SW706
SW707
SW708
SW709
SW710
SW711
SW712
SW713
SW714
SW715
SW716
IC701
IC703-A
IC703-B
IC703-C
IC702
X701
MIC1
J701
CORD
RXD
GND
HOOK
MIC_IN
PTT
+BV
TXD
DTMF
NOR
HOOK_DETECT
M5V
M8V