REVISIONS					
REV	ECN NO.	DESCRIPTION	DATE	BY	APP'D
A	200460	REL PER ER	12/02/05	RSC	IA

B 13841 REV PER PCN 1/23/06 RSC IA

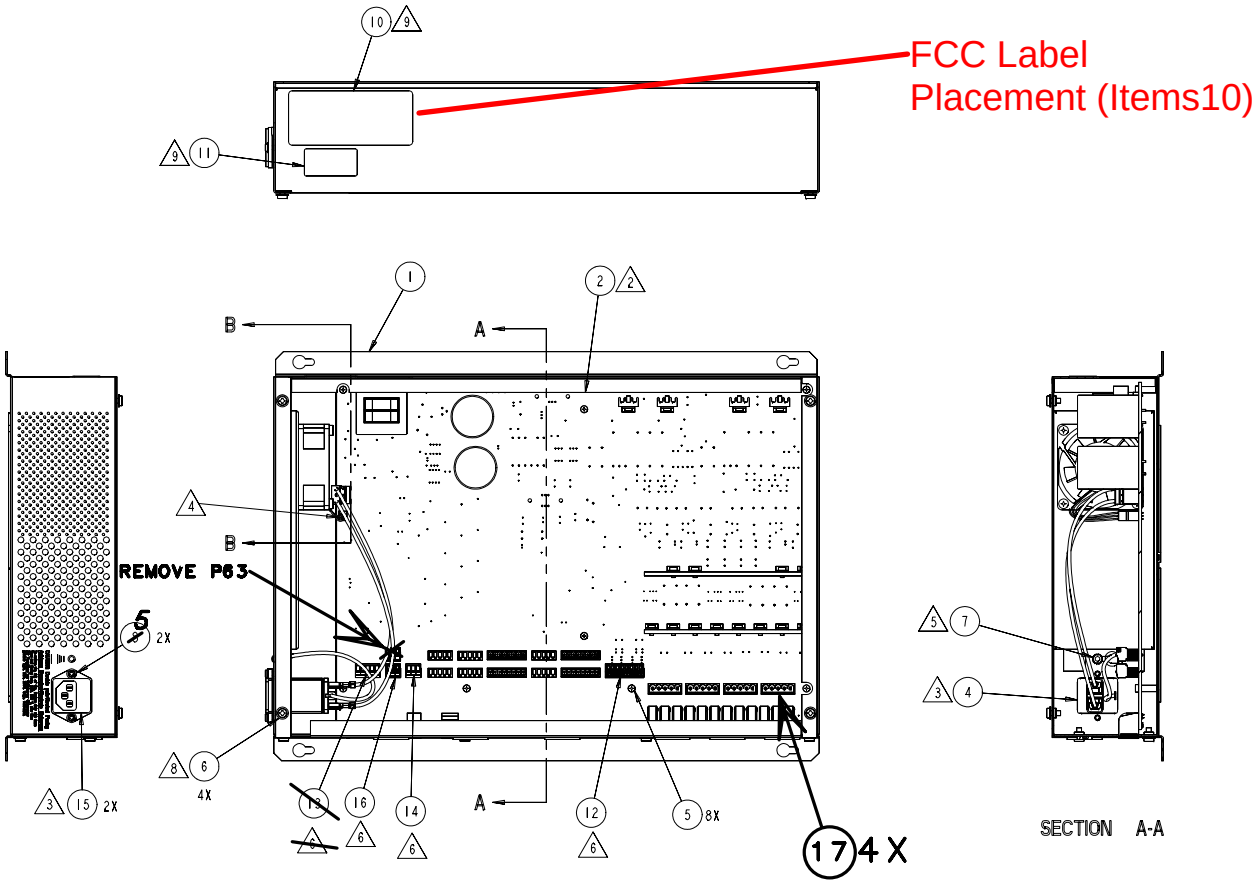

TOP VIEW-COVER REMOVED FOR CLAIRTY

SECTION A-A

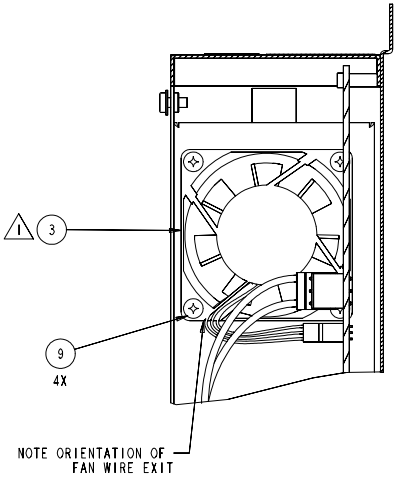

SECTION B-B
SCALE 1.000

NOTES:

1. ASSEMBLE FAN ASSY, ITEM 3, TO ENCLOSURE, ITEM 1, USING SCREWS, ITEM 9-4X.
2. ASSEMBLE PCB ASSY, ITEM 2, TO ENCLOSURE USING SCREWS, ITEM 5-8X.
3. ASSEMBLE POWER ENTRY MODULE ASSY, ITEM 4, TO ENCLOSURE, ITEM 1, USING SCREWS, ITEM 5-2X. INSTALL TWO FUSES, ITEM 15, INSIDE P.E.M.
4. PLUG CONNECTOR OF FAN ASSY, ITEM 3, INTO P89 OF PCB ASSY, ITEM 2.
5. ASSEMBLE GROUND WIRE (GRN/YEL WIRE) OF POWER ENTRY MODULE, ITEM 4, TO ENCLOSURE USING NUT ITEM 7. PLUG CONNECTOR OF POWER ENTRY MODULE INTO P62 OF PCB ASSY, ITEM 2.
6. PLUG CONNECTOR/LABEL ASSYS, ITEMS 12, 13, 14, 16, 17 INTO P54, P2, P8 - P63 &P64 RESPECTIVLY ON PCBV ASSY, ITEM 2.
7. ASSEMBLE THE FRONT PANEL, PART OF ITEM 1, TO THE ENCLOSURE, ALSO PART OF ITEM 1, USING SCREWS, ITEM 6-6X.
8. ASSEMBLE COVER, PART OF ITEM 1, TO ENCLOSURE, ALSO PART OF ITEM1, USING SCREWS, ITEM 6-4X.
9. PLACE UNIVERSAL LABELS, ITEMS 10 & 11, ON REAR PANEL WHERE SHOWN

5 & CONNECTORS

10 TORQUE HARDWARE M3 TO 0.8 Nm (7 lbf-in)

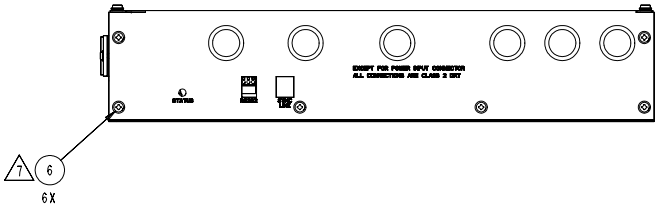

DIMENSIONS ARE IN mm
DO NOT SCALE DRAWING
ANSI STANDARD Y14.5M - 1982 APPLY

UNLESS OTHERWISE SPECIFIED TOLERANCES ARE:
.X = ± 0.5 mm
.XX = ± 0.30 mm
.XXX = ± 0.10 mm
ANGLES = 0° ± 30'

THIS DRAWING MAY CONTAIN PATENTED OR PROPRIETARY INFORMATION AND MUST NOT BE USED FOR MANUFACTURING OR ANY OTHER PURPOSE WITHOUT THE EXPRESS WRITTEN CONSENT OF SENSORMATIC ELECTRONICS. ACCEPTANCE OF THIS DRAWING WILL BE CONSTRUED AS AN AGREEMENT TO AND ACCEPTANCE OF THE FOREGOING.

THIRD ANGLE PROJECTION

SENSORMATIC ELECTRONICS CORPORATION
BOCA RATON, FL 33441, USA

DRAWN	CERASINI	7/12/05
PCB/SCHEM	XXXXX	20/22/23
ENGINEER	ALEXANDER	9/13/05
ENG. MGR.	XXXXX	20/22/23
QA'D	XXXXX	20/22/23

TITLE: CONTROLLER ZE9050

SIZE: D | DRAWING NUMBER: C0319-0011-01 | REV: A

PAGE | SCALE: 0.500 | SHEET 1 OF 1