Scale/1:1
Unit/mm
DO NOT SCALE DRAWING

R1	Initial Release	20191216
R2	Update model name	20191227
R3	Add:FCC ID: P27XXXXXX及以下 FCC警语	20200217
R4	Add:Sercomm P/N	20200224
R5	Add:FCC ID: P27RP362M	20200306
R6	for IP3421M-L/XX add： WiFi SSID: LIB-1234567 WiFi Password: 1234567890AB	20200316
R7	for 不同机种，WiFi SSID前缀不同	20200319
R8	Update:“Sercomm P/N” for“P/N”	20200323

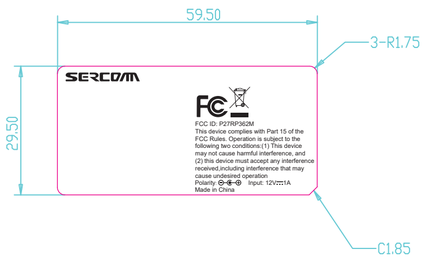

刀模线不印刷（DIM LINE NO PRINT）

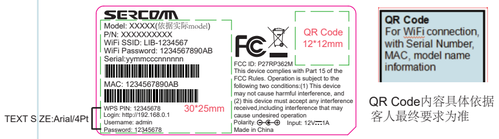

QR Code内容具体依据客人最终要求为准

TEXT SIZE:Arial/5Pt
Barcode：Code 128

依实际需求列印不同Model & Sercomm P/N

Sercomm P/N	Description	Customer	SSID前缀不同
0DFC0500E55	RP362M-L/US,Liberty Latin America,US PWR ADPT	LLA	S:LIB-xxxxxxx
0DFC0500E51	RP362M-L/CL,Liberty Latin America, EU PWR ADPT	LLA	
0DFC1500E55	IP3421M-L/US,Liberty Latin America,US PWR ADPT	LLA	
0DFC1500E51	IP3421M-L/CL,Liberty Latin America,EU PWR ADPT	LLA	
0DFC0500ER5	RP362M-M/US,Minim,US PWR ADPT	Minim	S:SR-xxxxxxx
0DFC2500E55	IP3421M-M/US,router,Minim,US PWR ADPT	Minim	
0DFC3500EX1	IP3421M-I/EU,router,Irdeto,EU PWR ADPT	Irdeto	

SN: yymmcccnnnnnn (13 digits Sercomm SN)
yy : last two digit (19 for 2019)
mm : 01-12
ccc : product code
nnnnnn : serial number

厂内列印示意，具体依实际需求为准
(The factory Print example)

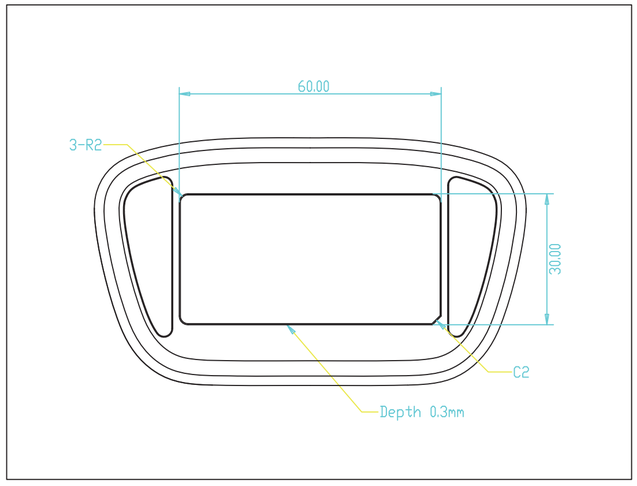

label与机构件匹配尺寸图
<Scale： 1:1>

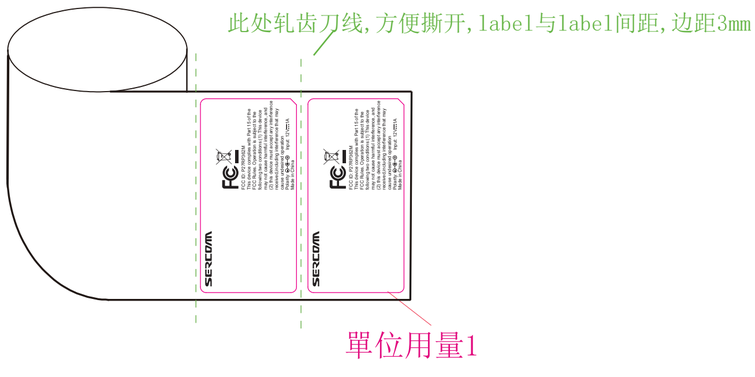

Notes:
1. 材質： 50#白色Mylar,
上打字用雾面PET
2. 背压花胶
3. 尺寸/印刷:如图
4. 公差:0.- 0.2mm
5. 本料件使用之材料須符合RoHS & UL
Wetting tension（表面张力）>=32dyne/cm

Notes:
1.MATERIAL: #50 white Mylar,
Can type with matt PET
2.ADHESIVE:Embossed Adhesive
3.SIZE:as drawing
4.PRINTING COLOR:as note
5.TOLERANCES:0,- 0.2mm
6.The material must comply with RoHS & UL
Wetting tension（表面张力）>=32dyne/cm

DONOTSCALEDRAWING

MODEL	Andes-D	NAME	Product label/Liberty Latin America		SCALE 1 / 1
DSN	Judy Du	PART. NO	932DFC01E5		SHEET 1 OF 1
CHK	Fanking Fan	MATERIAL	#50 white Mylar	Q' TY 1 PC	REV. 8
APV	Fanking Fan	SERCOM		DIMIN MM	REV. DATE 2020.03.23
FILE					

USED