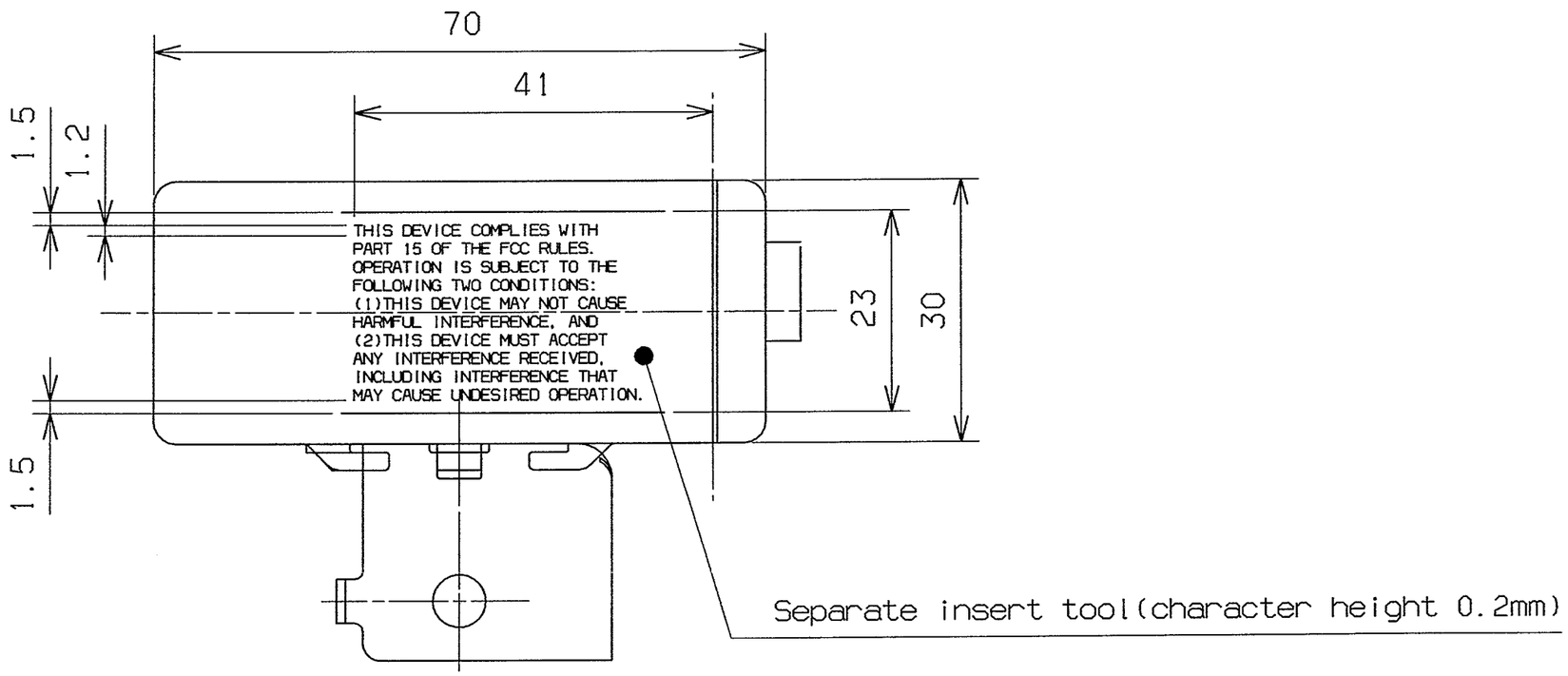
70
41
1.5
1.2
THIS DEVICE COMPLIES WITH
PART 15 OF THE FCC RULES.
OPERATION IS SUBJECT TO THE
FOLLOWING TWO CONDITIONS:
(1)THIS DEVICE MAY NOT CAUSE
HARMFUL INTERFERENCE, AND
(2)THIS DEVICE MUST ACCEPT
ANY INTERFERENCE RECEIVED,
INCLUDING INTERFERENCE THAT
MAY CAUSE UNDESIRED OPERATION.
23
30
1.5
Separate insert tool(character height 0.2mm)

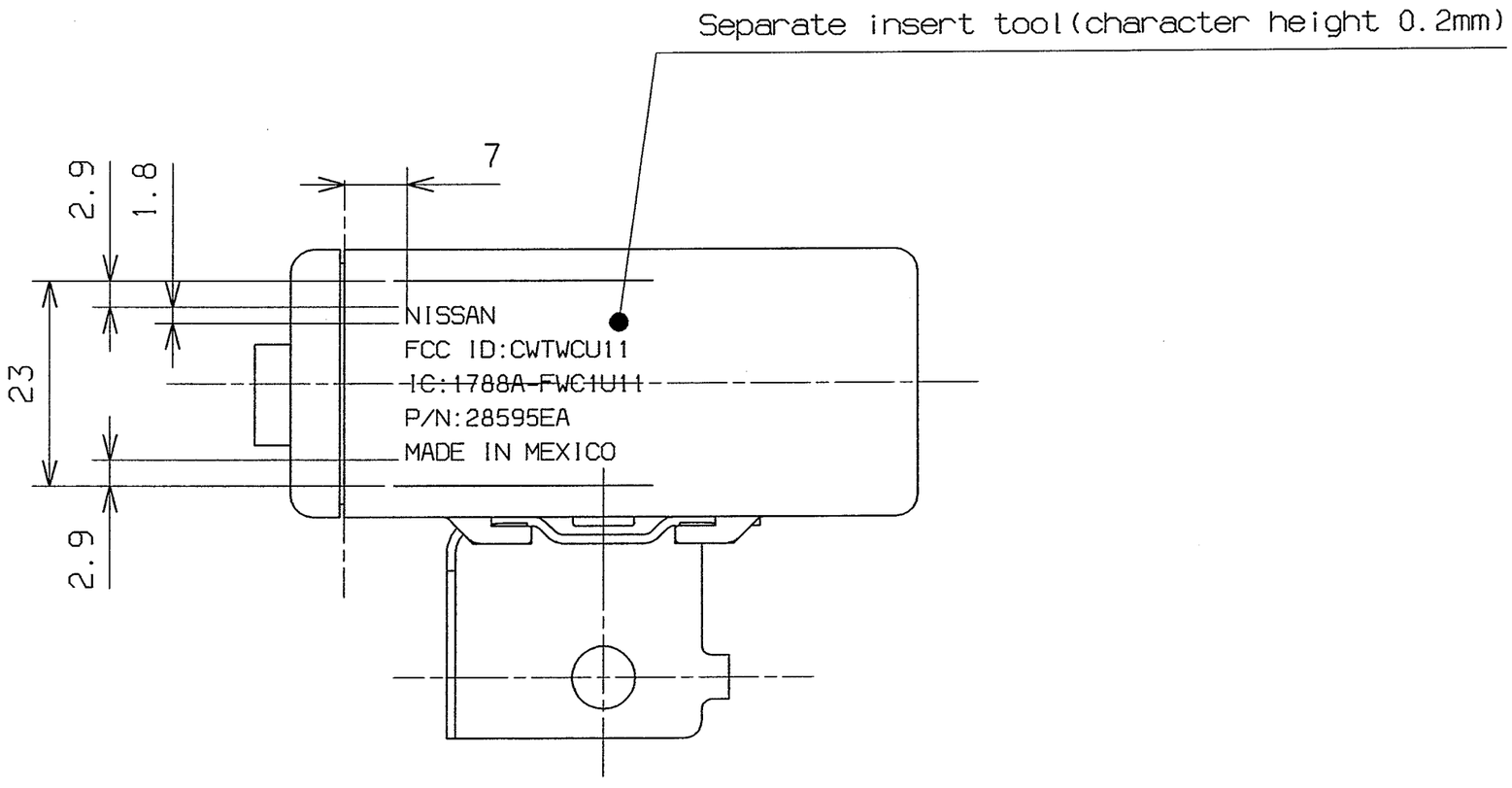
Separate insert tool(character height 0.2mm)
7
2.9
1.8
NISSAN
FCC ID:CWTWCU11
IC:1788A-FWC1U11
P/N:28595EA
MADE IN MEXICO
23
2.9