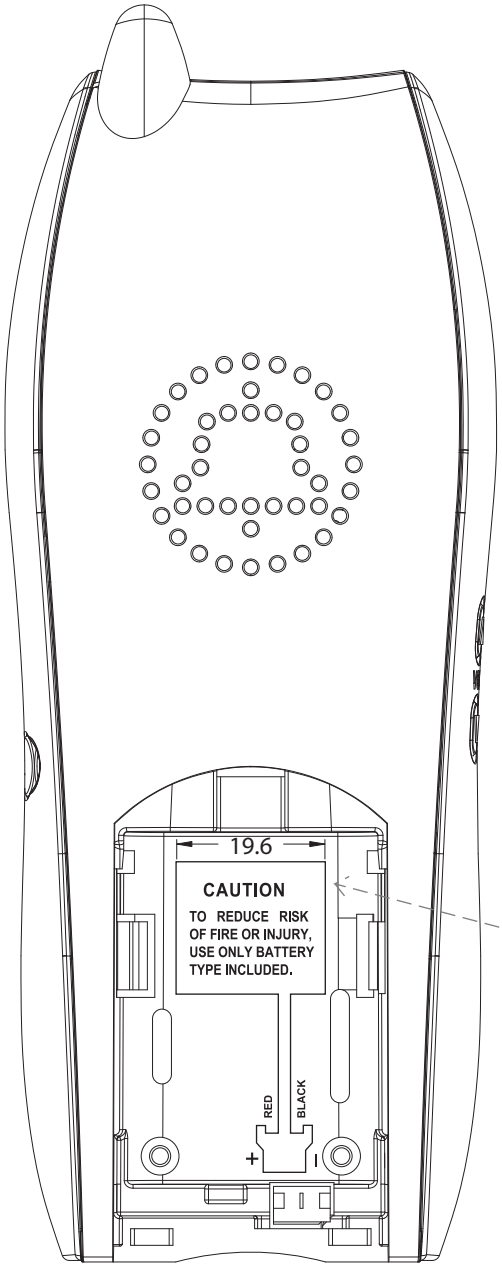


# GH4100 HANDSET

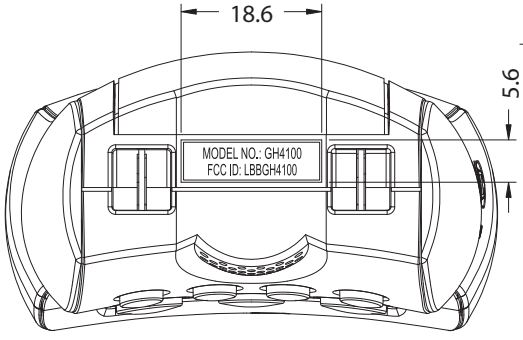


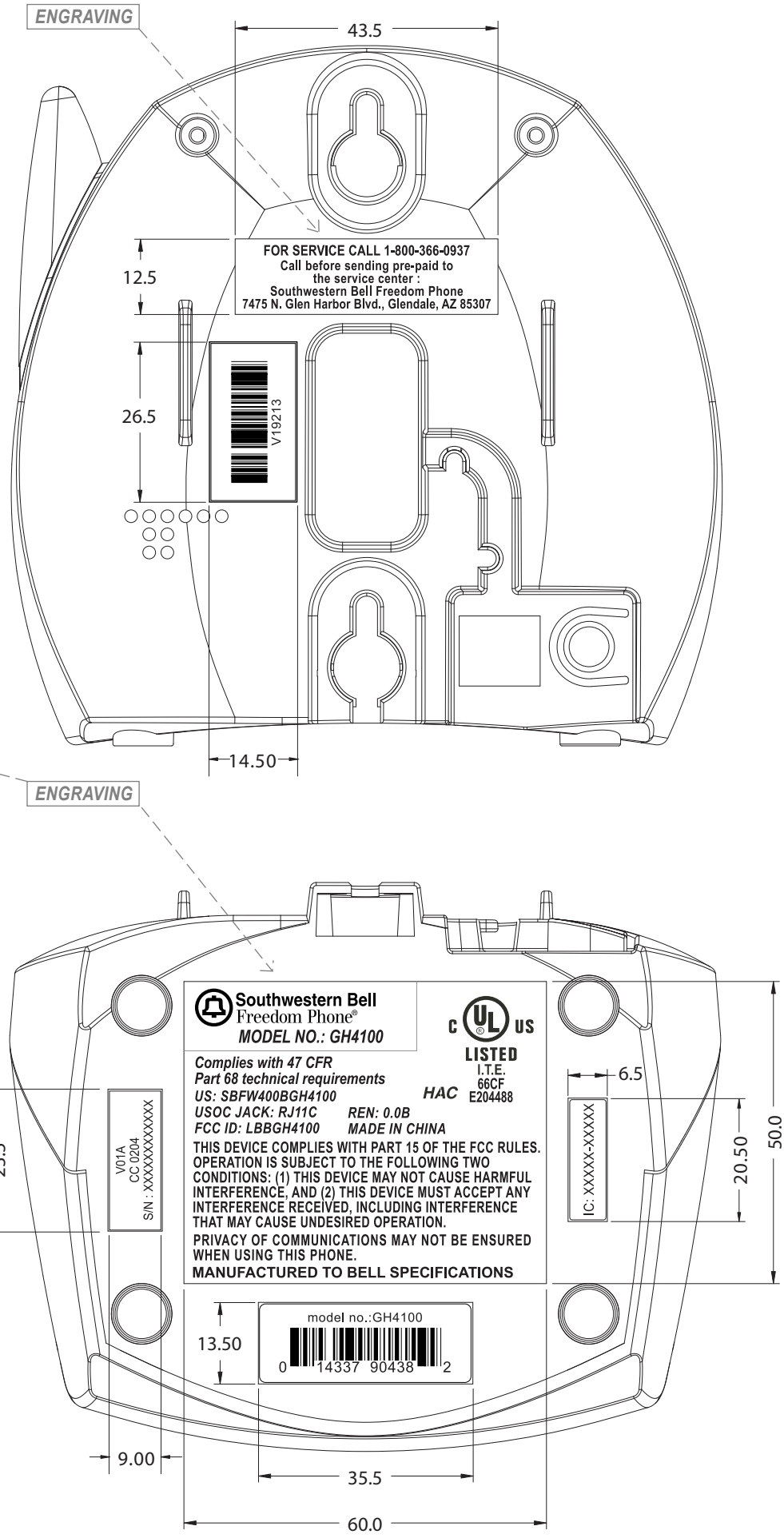


# GH4100 BASE

DATE: 12 FEB 2004