SCHEMATIC
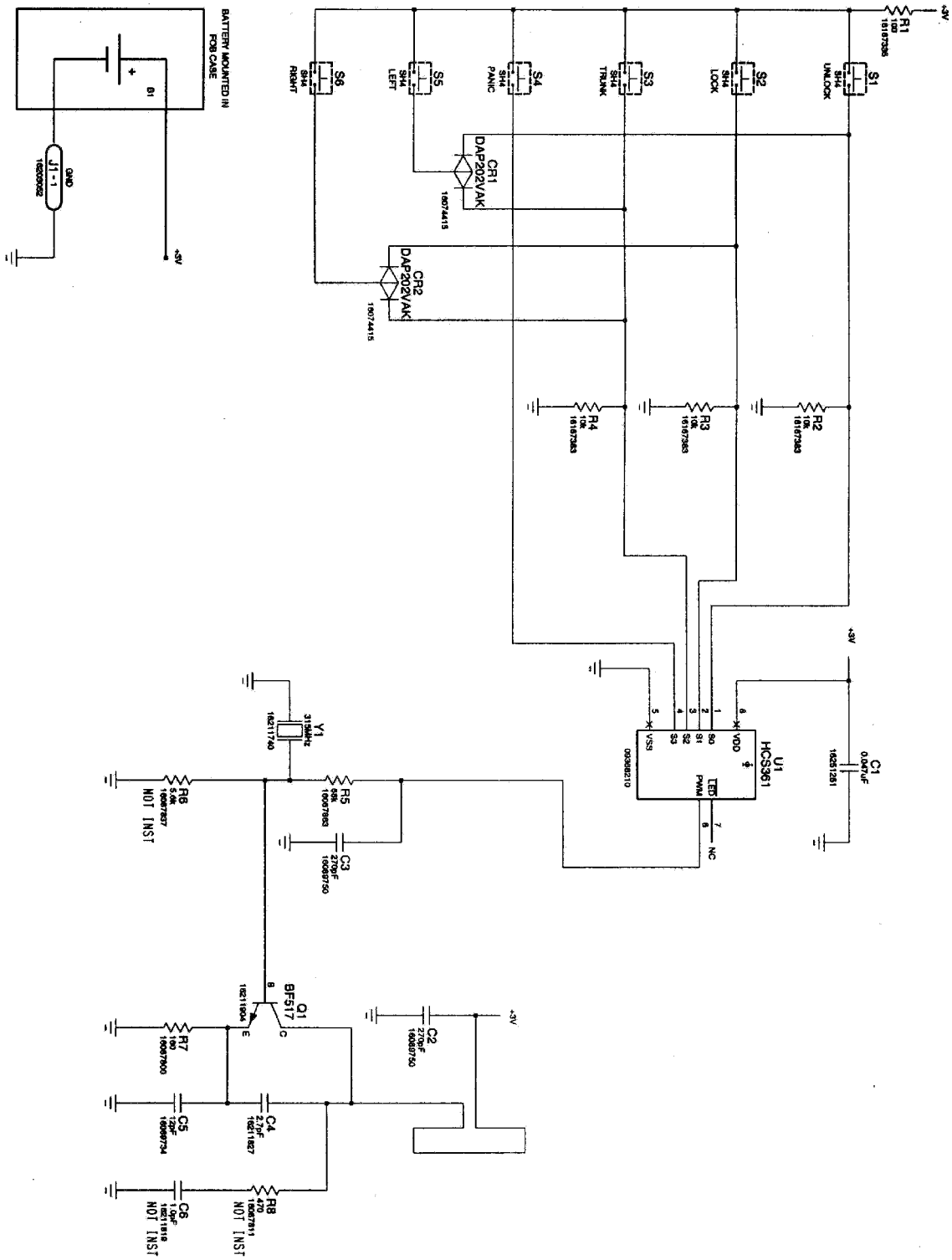
RFA-X KEYFOB TRANSMITTER