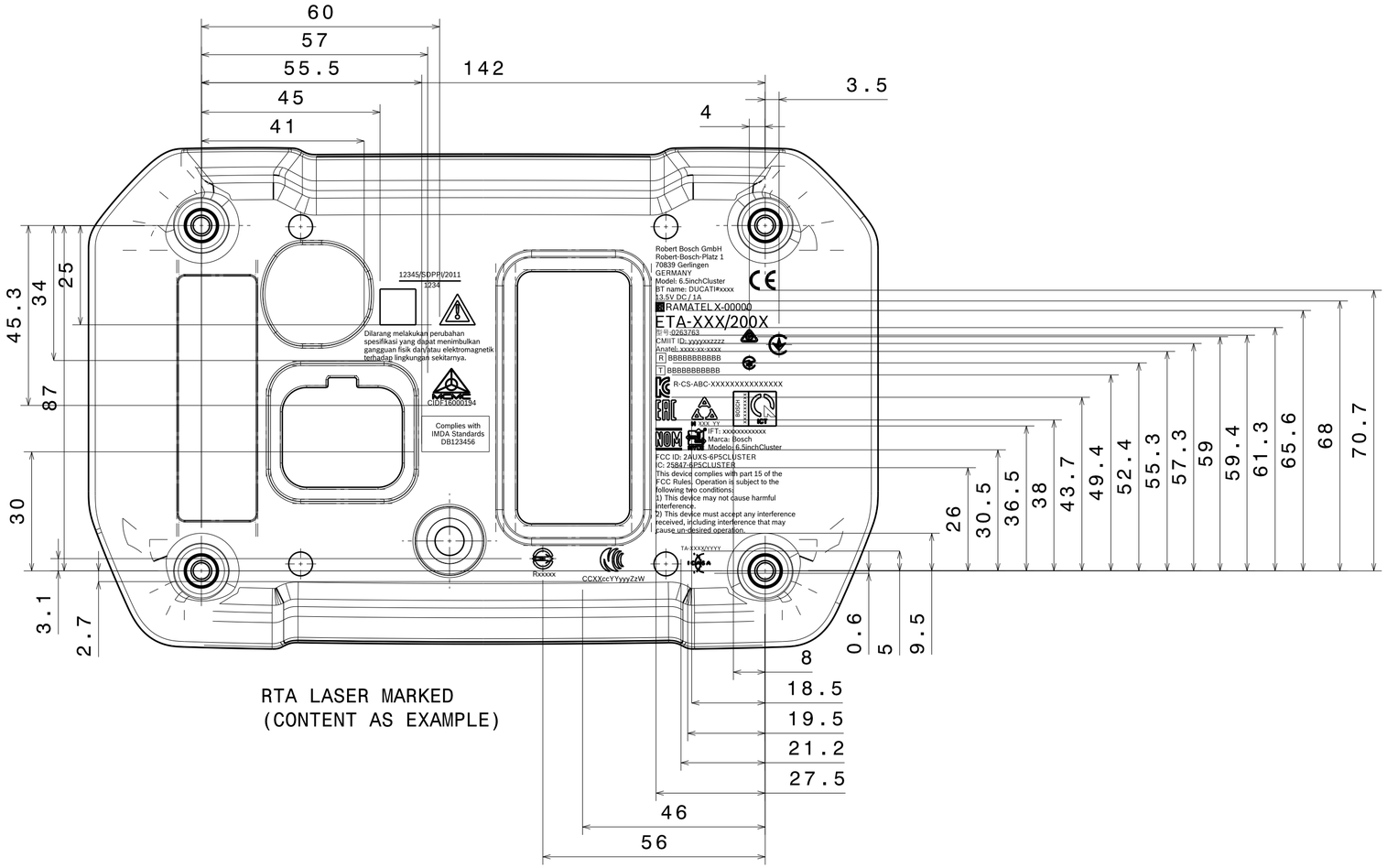

RTA LASER MARKED
(CONTENT AS EXAMPLE)

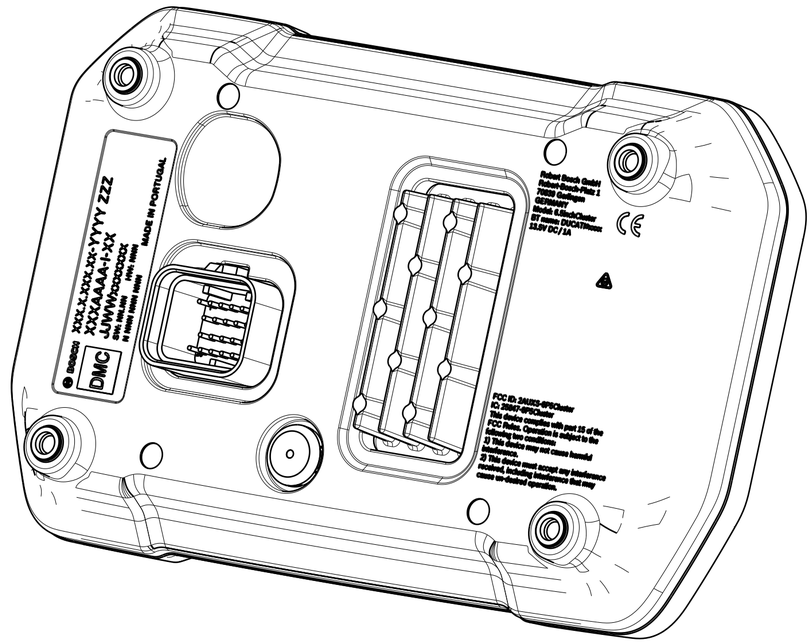

INFORMATION ONLY

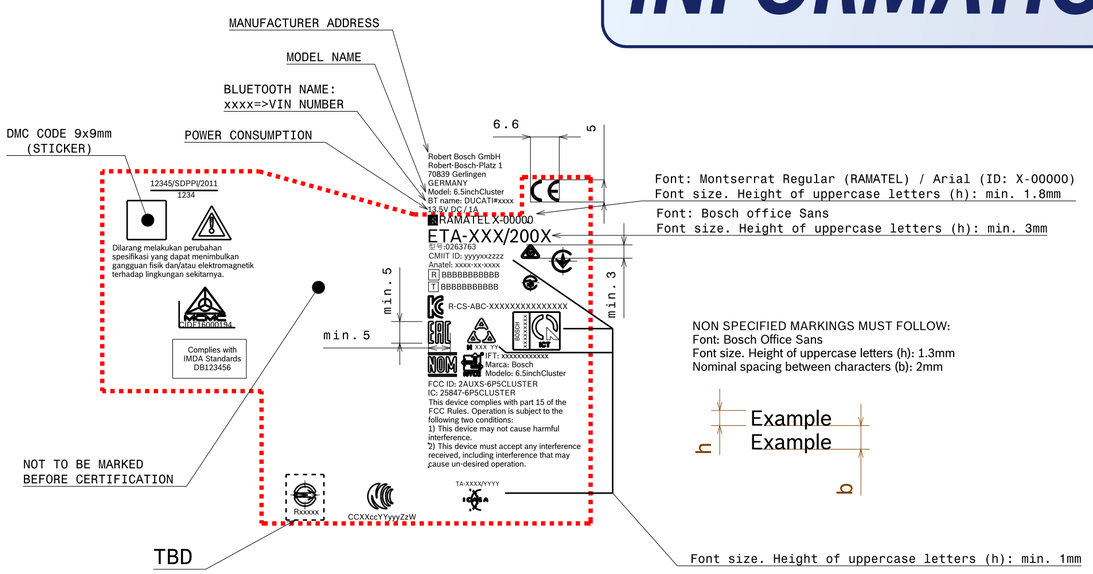

ARGENTINA	HUNGARY	RUSSIA
AUSTRALIA	ICELAND	SERBIA
AUSTRIA	INDIA	SINGAPORE
BELGIUM	INDONESIA	SLOVAKIA
BOLIVIA	IRELAND	SLOVENIA
BRAZIL	ITALY	SOUTH AFRICA
BULGARIA	JAPAN	SPAIN
CANADA	SOUTH KOREA	SWEDEN
CHINA	LATVIA	SWITZERLAND
COLOMBIA	LIECHTENSTEIN	TAIWAN
CROATIA	LITHUANIA	THAILAND
CYPRUS	LUXEMBOURG	TURKEY
CZECH REPUBLIC	MALAYSIA	UKRAINE
DENMARK	MALTA	UNITED KINGDOM
ESTONIA	MEXICO	UNITED STATES
FINLAND	NETHERLANDS	VIETNAM
FRANCE	NORWAY	
GERMANY	POLAND	
GREECE	PORTUGAL	
HONG KONG	ROMANIA	

Ind.	Change/Aend.	YYYYMMDD	Drawn/Gez.	Checked/Gepr.	Releas./Freig.	BWN	Resp. dept./Verantw.Abt.	Add. info./Zus. Info.
xx	information	20200903	HIV1LR	MRT1LR	REU1LR	815	CM-C12/ECM4	all labels
05	UPDATE	20200728	MRT1LR	HIV1LR	REU1LR	815	CM-C12/ECM4	FCC, IC, China
04	UPDATE	20200630	HIV1LR	MRT1LR	REU1LR	815	CM-C12/ECM4	Model name
02	NEW	20191017	HIV1LR	.	.	815	CM-C12/ECM4	NEW

Treatment/ Behandlung . .
Missed details/Fehlende Angaben . .
Size/Gst. _ _
Mat./Stoff .
From/Aus .

Lang./Spr. en/de
Wght./Gew. 0.1g
Crit. P. .
Scale/M.stab 1:1
BOSCH
RTA LASER MARKED
Sheet/Bl. 1/1
Doc. type DRW
8 613 017 137
DP/TD .
Ind. XX
Format A2
Mat.meets/Stoffe s. N2580-1
Syst. CAT
MNR .
Repl. for .
Repl. by .

© Robert Bosch GmbH. Alle Rechte vorbehalten, auch bzgl. jeder Verfügung, Verwertung, Reproduktion, Bearbeitung, Weitergabe sowie für den Fall von Schutzrechtsanmeldungen.

© Robert Bosch GmbH. All rights reserved, also regarding any disposal, exploitation, reproduction, editing, distribution, as well as in the event of applications for industrial property rights.