REVISIONS				
CK	REV	DESCRIPTION	DATE	APPD
	X35	PRODUCTION RELEASE PER ECO #		

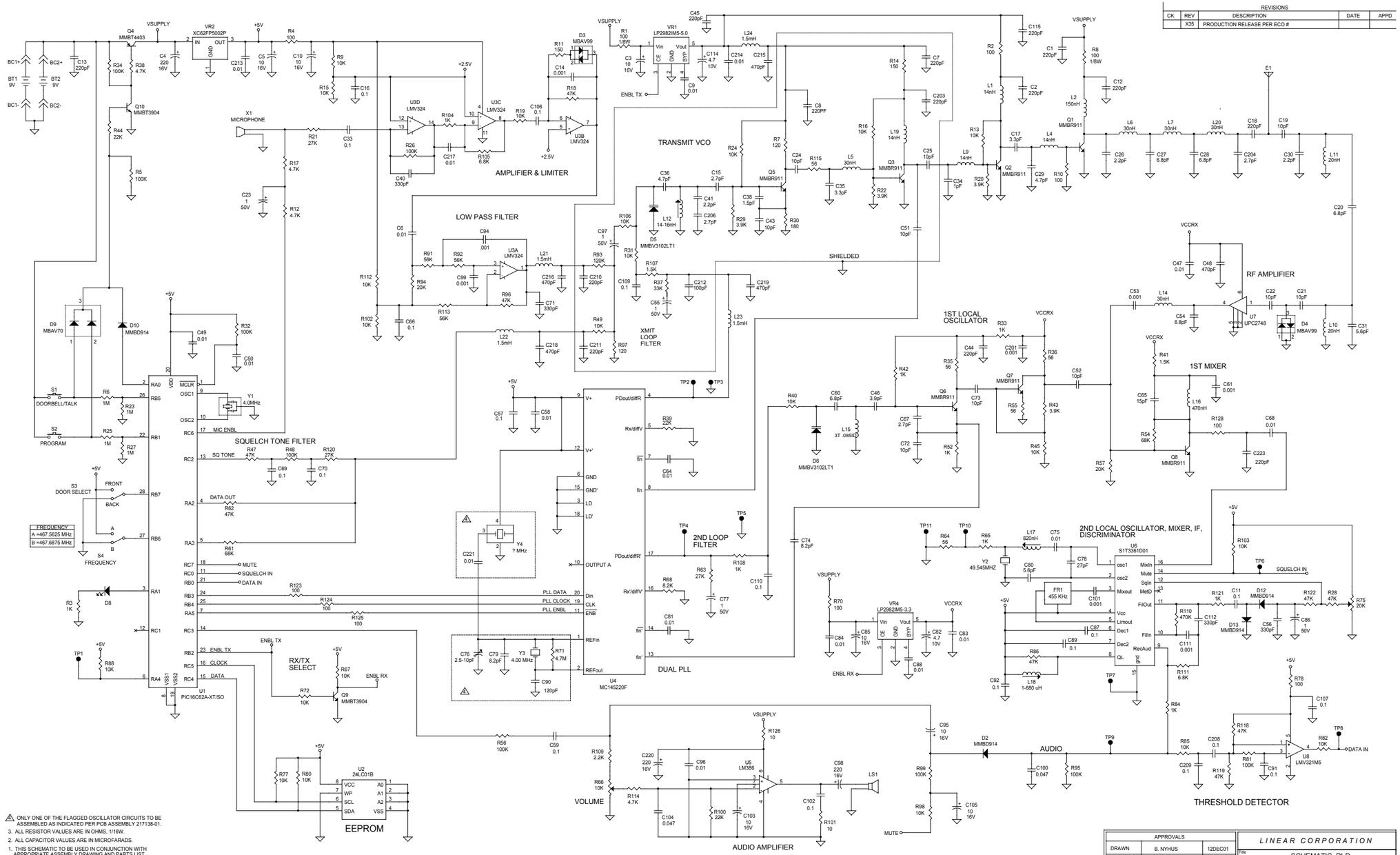

ONLY ONE OF THE FLAGGED OSCILLATOR CIRCUITS TO BE ASSEMBLED AS INDICATED PER PCB ASSEMBLY 217138-01.

3. ALL RESISTOR VALUES ARE IN OHMS, 1/16W.
2. ALL CAPACITOR VALUES ARE IN MICROFARADS.
1. THIS SCHEMATIC TO BE USED IN CONJUNCTION WITH APPROPRIATE ASSEMBLY DRAWING AND PARTS LIST.

NOTES: UNLESS OTHERWISE SPECIFIED.

APPROVALS		
DRAWN	B. NYHUS	12DEC01
ENGINEER	W. HELLWIG	12DEC01
CHECKED		

LINEAR CORPORATION

Title: SCHEMATIC, RI-D

Size: D | Document Number: 217142 | Rev: X36

Date: Monday, February 04, 2002 | Sheet 1 of 1

LINEAR CORPORATION
FCC ID: EF4 RFI00002