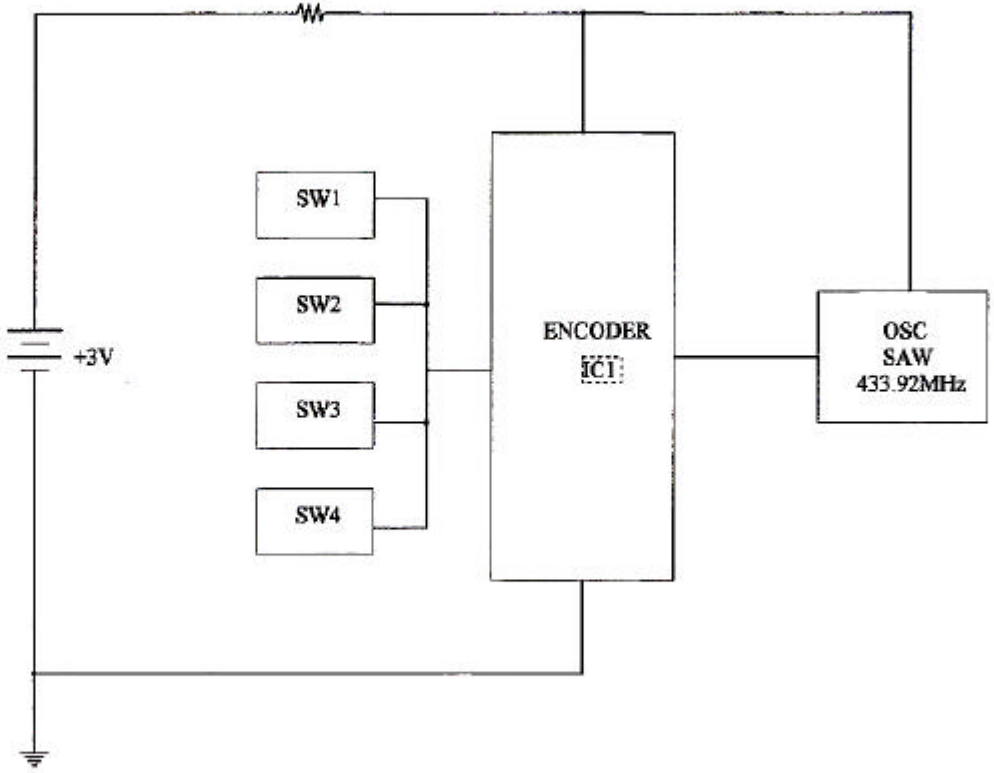
SW1
SW2
SW3
SW4
+3V
ENCODER
IC1
OSC
SAW
433.92MHz