ALIGNMENT PROCEDURE & SPECIFICATIONS

ALIGNMENT PROCEDURE FORM-8

DATE ISSUED FEB. 05 2001

APPRO	CHECK	ISSUE	WRITTEN

UNIDEN No UH-053ZL

BUYER'S MDL VMMS

DOCUMENT No.

NO.OF PAGES 21 W/ COVER PAGE

TABLE OF CONTENTS	PAGE
INITIALIZE	2
PRE-ADJUST	5
PRE CHECK	8
UNIT ADJUSTMENT	11
FUNCTION CHECK	14
ESN WRITING	17
SPECIFICATIONS	20
	-
	-
	-
	-
	-
	-
	-
	-
	-

ISSUER'S STAMP

JIG REQUIREMENT

JIG NAME	JIG NO. (PRODUCTION ASSIGNED)	ADAPTER NUMBER
INTERFACE JIG (MODIFIED)	UH - 041Z - 4497 - 042Z	
LEVEL SHIFTER JIG	UA - 378	
CONNECT JIG	UH - 052ZP - 4582	

ALIGNMENT PROCEDURE	FORM-1	EQUIPMENT SETTING	PAGE	2

MODEL	UNIT	BLOCK	ISSUE DATE	ISSUED
UH-053ZL	MAIN PCB		FEB. 05 2001	H.KAMBARA

TITLE	MAIN PCB INITIALIZE	SUB TITLE		

REQUIRED EQUIPMENT AND JIG

NO.	JIG / EQUIPMENT NAME	JIG/EQUIP. MODEL NO.	QTY	REMARKS
1	MAIN PCB INITIAL JIG		1	
2	PC		1	COM1
3	LEVEL SHIFTER JIG	UA - 378	1	WITH AC ADAPTER
4	INTERFACE JIG	UH - 041Z - 4497 - 042Z	1	
5	DC SUPPLY		1	
6	CABLE	WZ - 1176	1	
7	RS-232C CABLE		1	
8	CURRENT METER		1	MAX. 1.0A
9	CONNECT JIG	UH - 052ZP - 4582	1	

JIG AND EQUIPMENT SETTING

TOOLS / EQPT REQ'D FOR ADJUSTMENT

EQUIPMENT / JIG CONNECTION DIAGRAM

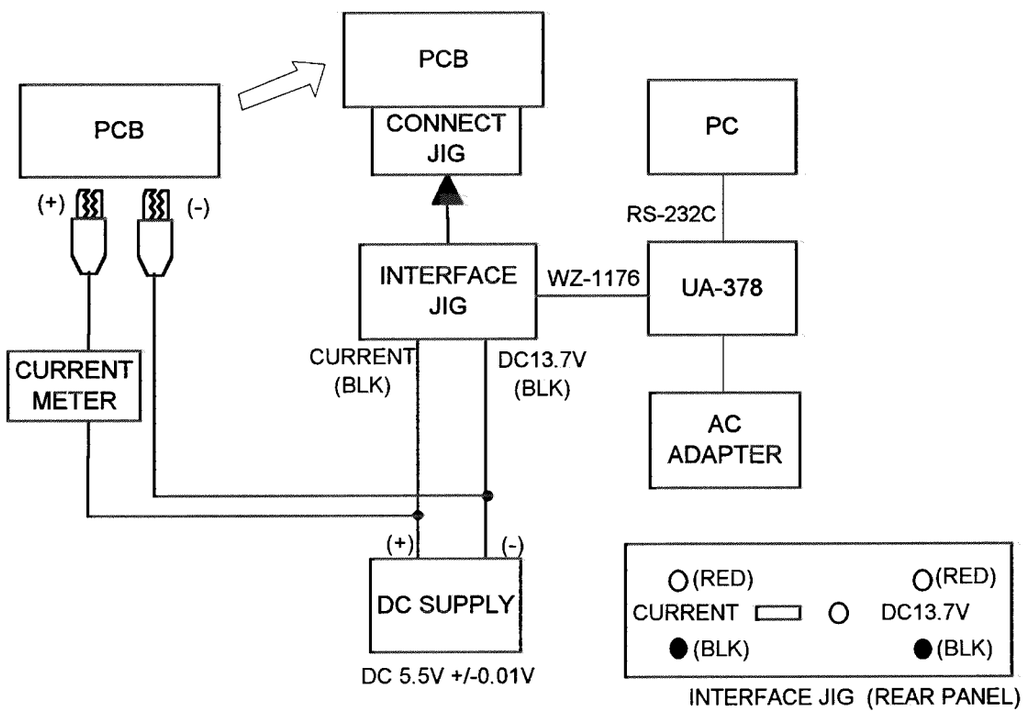

ALIGNMENT PROCEDURE FORM - 3

MODEL	UNIT	BLOCK	ISSUE DATE	ISSUED
UH-053ZL	MAIN PCB		FEB. 05 2001	H.KAMBARA

TITLE	MAIN PCB INITIALIZE	SUB TITLE		REF DIAGRAM

STEP	CHECK POINT	SPEC	PROCEDURE
1	CURRENT METER	LESS THAN 0.05mA.	CONNECT CLIPS TO BATTERY TERMINALS OF PCB. CHECK THE CURRENT.
2			REMOVE CLIP FROM PCB AND CONNECT TO THE CONNECT JIG.
2	CURRENT METER	MORE THAN 40mA LESS THAN 80mA	CHECK THE CURRENT AFTER POWER ON BEEP.
4	SCREEN OF PC	OK	PCB CAN BE INITIALIZED CORRECTLY
		NG	PCB CAN NOT BE INITIALIZED

ALIGNMENT PROCEDURE	FORM-5	SPECIFICATION	PAGE	4

MODEL	SECTION	BLOCK	ISSUE DATE	ISSUED
UH-053ZL	MAIN PCB		FEB. 05 2001	H.KAMBARA

TITLE	MAIN PCB INITIALIZE	SPEC.	

1. STANDARD CONDITION

PC COM1 : RS-232C LEVEL SHIFTER JIG MODE : UNIPRO

DC SUPPLY OUTPUT VOLT : 5.5V +/-0.01V

MAX CURRENT : 1.0A

2. MEASUREMENT CONDITION

MEASUREMENT TEMP. = 25 DEGREE C

3. TEST MODE SETUP

NONE

4. SPECIFICATION

NO.	ITEM	CONDITION	UNIT	SPEC	REMARKS
1	RECEIVE CURRENT	PCB JIG CONNECT		40 - 80mA	JIG CONNECT
2	MAIN PCB INITIALIZE	PCB		OK	ADJUST SOFT

ALIGNMENT PROCEDURE	FORM-1	EQUIPMENT SETTING	PAGE	5

MODEL	UNIT	BLOCK	ISSUE DATE	ISSUED
UH-053ZL	MAIN PCB		FEB. 05 2001	H.KAMBARA

TITLE	PRE-ADJUST	SUB TITLE		

REQUIRED EQUIPMENT AND JIG

NO.	JIG / EQUIPMENT NAME	JIG/EQUIP. MODEL NO.	QTY	REMARKS
1	HP8920A		1	WITH OPT 003(103),004,005,
				008,011,014,050
2	PC WITH GPIB INTERFACE		1	GPIB:HP82335B
3	LEVEL SHIFTER JIG	UA - 378Z	1	WITH AC ADAPTOR
4	INTERFACE JIG	UH - 041Z - 4497 - 042Z	1	
5	DC SUPPLY		1	
6	RS-232C CABLE		1	
7	GPIB CABLE		1	
8	CABLE	WZ - 1176	1	
9	RF CABLE		1	
10	CONNECT JIG	UH - 052ZP - 4582	1	

JIG AND EQUIPMENT SETTING

TOOLS / EQPT REQ'D FOR ADJUSTMENT

EQUIPMENT / JIG CONNECTION DIAGRAM

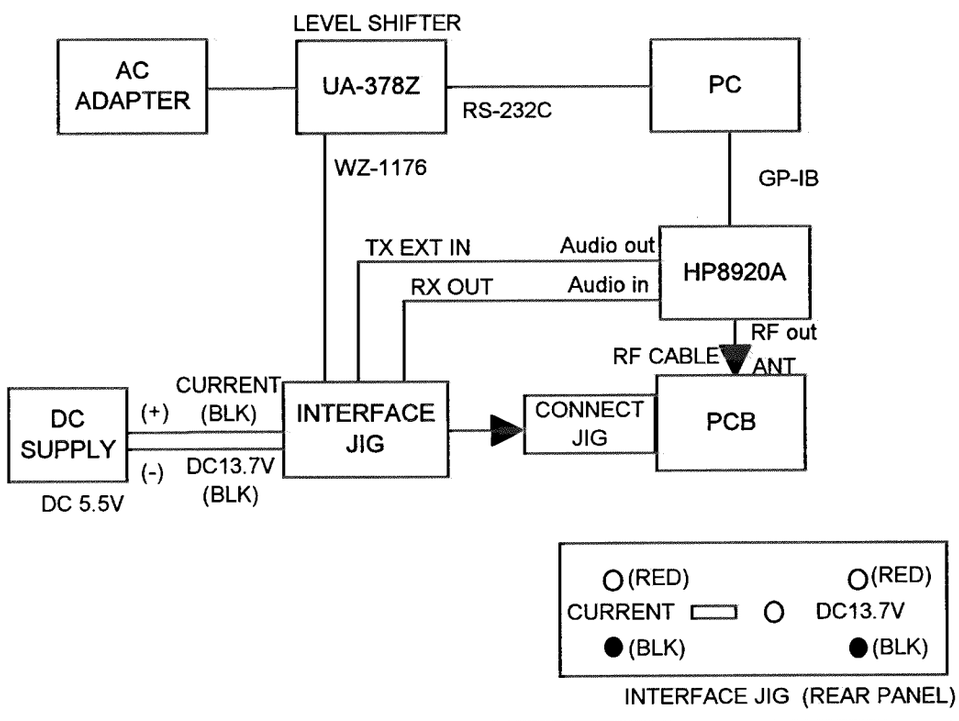

ALIGNMENT PROCEDURE FORM - 3

MODEL	UNIT	BLOCK	ISSUE DATE	ISSUED
UH-053ZL	MAIN PCB		FEB. 05 2001	H.KAMBARA

TITLE	PRE-ADJUST	SUB TITLE		REF DIAGRAM

STEP	CHECK POINT	SPEC	PROCEDURE
1			RUN THE PRE-ADJUST PROGRAM OF PC
2	SCREEN OF PC	OK	PCB CAN BE PRE-ADJUSTED CORRECTLY
		NG	PCB CAN NOT BE PRE-ADJUSTED

ALIGNMENT PROCEDURE	FORM-5	SPECIFICATION	PAGE 7

MODEL	SECTION	BLOCK	ISSUE DATE	ISSUED
UH-053ZL	MAIN PCB		FEB. 05 2001	H.KAMBARA

TITLE	PRE-ADJUST	SPEC.	

1. STANDARD CONDITION

PC	COM1	:	RS-232C	LEVEL SHIFTER JIG	MODE	:	UNIPRO
DC SUPPLY	OUTPUT VOLT	:	5.5 +/-0.01V	INTERFACE JIG	CURRENT	:	METER
	MAX CURRENT	:	1.0A		TXAU	:	EXT IN
HP8920A	ADDRESS	:	14				
	MODE	:	TALK&LSTN				

2. MEASUREMENT CONDITION

MEASUREMENT TEMP. = 25 DEGREE C

RF CABLE LOSS MUST BE COMPENSATED BY INPUTTING PARAMETER TO PC

3. TEST MODE SETUP

NONE

4. SPECIFICATION

NO.	ITEM	CONDITION	UNIT	SPEC	REMARKS
1	MAIN PCB PRE-ADJUST	PCB		OK	ADJUST SOFT

ALIGNMENT PROCEDURE FORM-1	EQUIPMENT SETTING	PAGE 8

MODEL	UNIT	BLOCK	ISSUE DATE	ISSUED
UH-053ZL	MAIN PCB		FEB. 05 2001	H.KAMBARA

TITLE	PRE CHECK	SUB TITLE		

REQUIRED EQUIPMENT AND JIG

NO.	JIG / EQUIPMENT NAME	JIG/EQUIP. MODEL NO.	QTY	REMARKS
1	NJZ-900A WITH H/S		1	
2	DC SUPPLY		2	
3	INTERFACE JIG	UH - 041Z - 4497 - 042Z	1	
4	RF CABLE		1	
5	CONNECT JIG	UH - 052ZP - 4582	1	
6	CURRENT METER		1	MAX 1.0A
7				
8				
9				

JIG AND EQUIPMENT SETTING

TOOLS / EQPT REQ'D FOR ADJUSTMENT

EQUIPMENT / JIG CONNECTION DIAGRAM

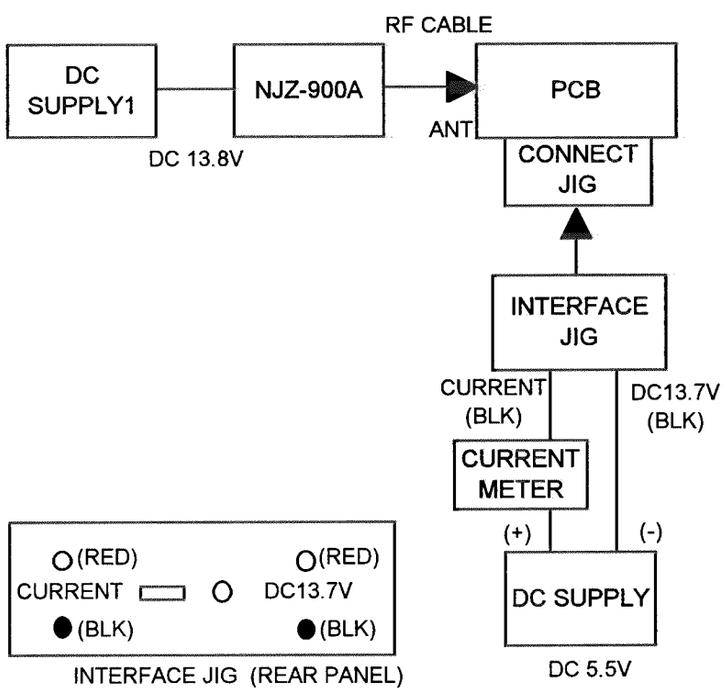

ALIGNMENT PROCEDURE FORM - 3

MODEL	UNIT	BLOCK	ISSUE DATE	ISSUED
UH-053ZL	MAIN PCB		FEB. 05 2001	H.KAMBARA

TITLE	PRE CHECK	SUB TITLE		REF DIAGRAM

STEP	CHECK POINT	SPEC	PROCEDURE
1	PANIC SIREN CURRENT	100 - 300mA (WITHOUT SIREN SPEAKER)	PUSH LEFT AND RIGHT KEY FOR MORE THAN 1 SEC. THEN CHECK THE CURRENT. PUSH LEFT AND RIGHT KEY FOR MORE THAN 1 SEC TO STOP THE SIREN.
2	NJZ-900A (INITIAL ONLY)		SET CH & MIN OF NJZ900A IN AUTO TEST MODE. PRESS NJZ900A "RESET" "CALL PROCESS" & "START". IDLE LED WILL FLASHING LCD DISPLAY SHOWS MIN No. " MIN=1234567890 "
3	LED's	IN USE LED	PRESS 911 KEY OF PCB. INUSE LED WILL FLASH AND WILL BE STILL AFTER CONNECTED TO NJZ900A.
	CONNECTION	CONNECTION OK	NJZ900A ORIGINATION LED WILL BE ON AND LCD DISPLAY SHOW FOLLOWS. "0123456789000000 SN=1A5FC897 " AND RING WILL COME APPEAR
		CONNECTION NG	NJZ900A ORIGINATION WILL NOT BE ON, NOR BEEP COME APPEAR. PRESS "RESET" OF NJZ900A.
4	NJZ-900A	TALK FUNCTION	PRESS SEND KEY OF NJZ900A H/S. CHECK TALK FUNCTIONS WHILE TALK MODE LED IS BLINKING
5	CURRENT EAR SP OF NJZ-900A'S H/S	LESS THAN 700mA NO UNUSUAL NOISE	CHECK CURRENT. CHECK EAR SPEAKER NOISE
6			PRESS 911 KEY MORE THAN 1 SEC. CHECK CONNECTION WILL BE RELEASE.

ALIGNMENT PROCEDURE	FORM-5	SPECIFICATION	PAGE 10

MODEL	SECTION	BLOCK	ISSUE DATE	ISSUED
UH-053ZL	MAIN UNIT	MAIN UNIT	FEB. 05 2001	H.KAMBARA

TITLE	PRE CHECK	SPEC.	

1. STANDARD CONDITION

DC SUPPLY1	OUTPUT VOLT	:	13.8V
	MAX CURRENT	:	6.0A
DC SUPPLY2	OUTPUT VOLT	:	5.5V
	MAX CURRENT	:	1.0A
NJZ-900A	AUTO CHECK SETUP	:	CH (M0) 0383, SCC=0, MIN=1234567890
	RF OUTPUT	:	-70dBm
	MODE	:	CALL PROCESS

2. MEASUREMENT CONDITION

MEASUREMENT TEMP. = 25 DEGREE C

3. TEST MODE SETUP

NONE

4. SPECIFICATION

NO.	ITEM	CONDITION	UNIT	SPEC	REMARKS
1					

ALIGNMENT PROCEDURE FORM-1	EQUIPMENT SETTING	PAGE 11

MODEL	UNIT	BLOCK	ISSUE DATE	ISSUED
UH-053ZL	MAIN UNIT		FEB. 05 2001	H.KAMBARA

TITLE	UNIT ADJUSTMENT	SUB TITLE		

REQUIRED EQUIPMENT AND JIG

NO.	JIG / EQUIPMENT NAME	JIG/EQUIP. MODEL NO.	QTY	REMARKS
1	HP8920A		1	WITH OPT 003(103),004,005,
				008,011,014,050
2	PC WITH GPIB INTERFACE		1	GPIB:HP82335B
3	LEVEL SHIFTER JIG	UA - 378Z	1	WITH AC ADAPTER
4	INTERFACE JIG	UH - 041Z - 4497 - 042Z	1	
5	DC SUPPLY		1	
6	RS-232C CABLE		1	
7	GPIB CABLE		1	
8	CABLE	WZ - 1176	1	
9	RF CABLE		1	
10	CONNECT JIG	UH - 052ZP - 4582	1	
11	SHIELD ROOM		1	(RECOMMENDED TO USE)

JIG AND EQUIPMENT SETTING

TOOLS / EQPT REQ'D FOR ADJUSTMENT

EQUIPMENT / JIG CONNECTION DIAGRAM

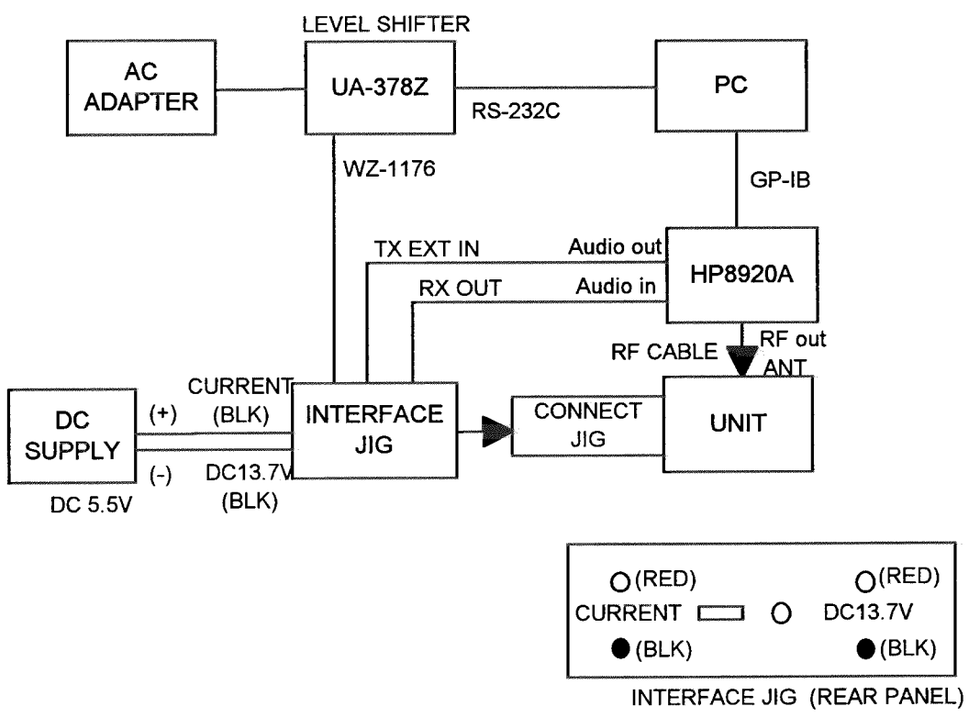

ALIGNMENT PROCEDURE FORM - 3

MODEL	UNIT	BLOCK	ISSUE DATE	ISSUED
UH-053ZL	MAIN UNIT		FEB. 05 2001	H.KAMBARA

TITLE	UNIT ADJUSTMENT	SUB TITLE		REF DIAGRAM

STEP	CHECK POINT	SPEC	PROCEDURE
1			RUN ADJUSTMENT SOFTWARE.
2	SCREEN OF PC	OK	PCB CAN BE ADJUSTED CORRECTLY
		NG	PCB CAN NOT BE ADJUSTED

ALIGNMENT PROCEDURE	FORM-5	SPECIFICATION	PAGE	13

MODEL	SECTION	BLOCK	ISSUE DATE	ISSUED
UH-053ZL	MAIN UNIT		FEB. 05 2001	H.KAMBARA

TITLE	UNIT ADJUSTMENT	SPEC.	

1. STANDARD CONDITION

PC	COM1	:	RS-232C	LEVEL SHIFTER JIG	MODE	:	UNIPRO
DC SUPPLY	OUTPUT VOLT	:	5.5V	INTERFACE JIG	CURRENT	:	METER
	MAX CURRENT	:	1.0A		TXAU	:	EXT IN
HP8920A	ADDRESS	:	14				
	MODE	:	TALK&LSTN				

2. MEASUREMENT CONDITION

MEASUREMENT TEMP. = 25 DEGREE C

RF CABLE LOSS MUST BE COMPENSATED BY INPUTTING PARAMETER TO PC

3. TEST MODE SETUP

NONE

4. SPECIFICATION

NO.	ITEM	CONDITION	UNIT	SPEC	REMARKS
1	MAIN PCB PRE-ADJUST	PCB		OK	ADJUST SOFT
2	REFER TO SPECIFICATION				

ALIGNMENT PROCEDURE	FORM-1	EQUIPMENT SETTING	PAGE	14

MODEL	UNIT	BLOCK	ISSUE DATE	ISSUED
UH-053ZL	MAIN UNIT		FEB. 05 2001	H.KAMBARA

TITLE	FUNCTION CHECK	SUB TITLE		

REQUIRED EQUIPMENT AND JIG

NO.	JIG / EQUIPMENT NAME	JIG/EQUIP. MODEL NO.	QTY	REMARKS
1	NJZ-900A WITH H/S		1	
2	DC SUPPLY		2	
3	INTERFACE JIG	UH - 041Z - 4497 - 042Z	1	
4	CONNECT JIG	UH - 052ZP - 4582	1	
5	CURRENT METER		1	MAX 1.0A
6	ANTENNA		1	for NJZ-900A
7	SPL METER		1	
8	SHIELD ROOM		1	(RECOMMENDED TO USE)
9				

JIG AND EQUIPMENT SETTING

TOOLS / EQPT REQ'D FOR ADJUSTMENT

EQUIPMENT / JIG CONNECTION DIAGRAM

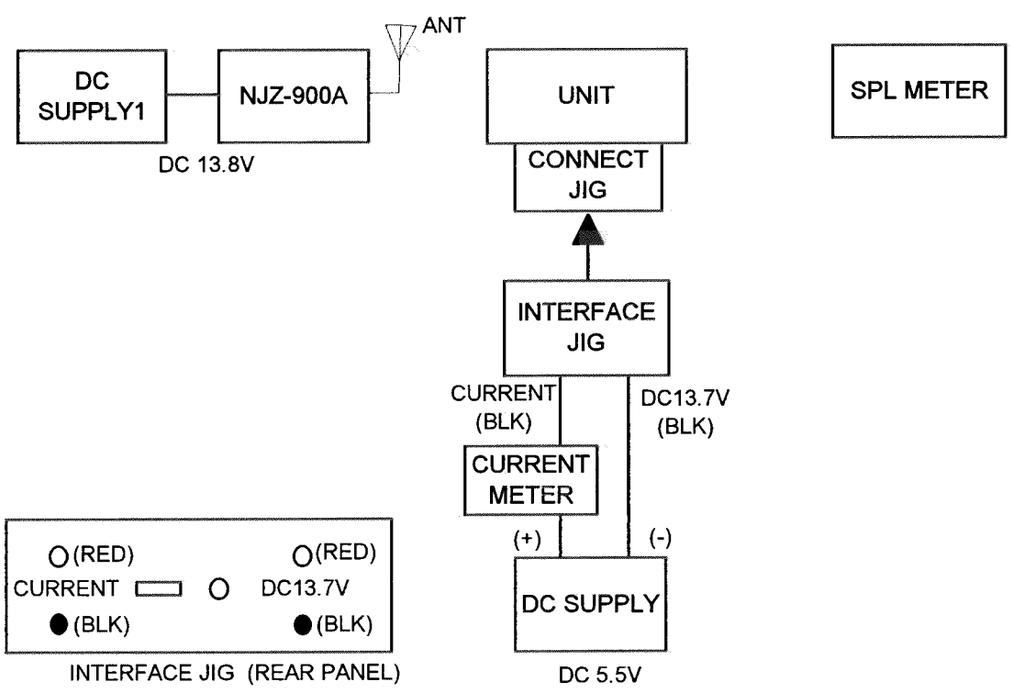

ALIGNMENT PROCEDURE FORM - 3

MODEL	UNIT	BLOCK	ISSUE DATE	ISSUED
UH-053ZL	MAIN UNIT		FEB. 05 2001	H.KAMBARA

TITLE	FUNCTION CHECK	SUB TITLE		REF DIAGRAM

STEP	CHECK POINT	SPEC	PROCEDURE
1	PANIC SIREN CURRENT SPL	 100 - 300mA 90dBSPL	PUSH LEFT AND RIGHT KEY FOR 1 SEC. CHECK THERE IS NO BUZZ SOUND. CHECK CURRENT. CHECK MAX. SOUND PRESSURE LEVEL AT DISTANCE OF 1m.
2	NJZ-900A (INITIAL ONLY)		SET CH & MIN OF NJZ900A IN AUTO TEST MODE. PRESS NJZ900A "RESET" "CALL PROCESS" & "START". IDLE LED WILL FLASHING LCD DISPLAY SHOWS MIN No. " MIN=1234567890 "
3	LED's	IN USE LED	PRESS 911 KEY OF PCB. INUSE LED WILL FLASH AND WILL BE STILL AFTER CONNECTED TO NJZ900A.
	CONNECTION	CONNECTION OK	NJZ900A ORIGINATION LED WILL BE ON AND LCD DISPLAY SHOW FOLLOWS. "0123456789000000 SN=1A5FC897 " AND RING WILL COME APPEAR
		CONNECTION NG	NJZ900A ORIGINATION WILL NOT BE ON, NOR BEEP COME APPEAR. PRESS "RESET" OF NJZ900A.
4	NJZ-900A	TALK FUNCTION	PRESS SEND KEY OF NJZ900A H/S. CHECK TALK FUNCTIONS WHILE TALK MODE LED IS BLINKING
5	CURRENT EAR SP OF UNIT VOLUME EAR SP OF NJZ-900A'S H/S	LESS THAN 700mA NO UNUSUALNOISE VOLUME CHANGE NO UNUSUALNOISE	CHECK CURRENT. CHECK EAR SPEAKER NOISE CHECK EAR SPEAKER VOLUME WILL BE CHANGE EVERY LEFT KEY PUSH. CHECK EAR SPEAKER NOISE
6			PRESS 911 KEY MORE THAN 1 SEC. CHECK CONNECTION WILL BE RELEASE.

ALIGNMENT PROCEDURE	FORM-5	SPECIFICATION	PAGE 16

MODEL	SECTION	BLOCK	ISSUE DATE	ISSUED
UH-053ZL	MAIN UNIT		FEB. 05 2001	H.KAMBARA

TITLE	FUNCTION CHECK	SPEC.	

1. STANDARD CONDITION

DC SUPPLY1	OUTPUT VOLT	:	13.8V
	MAX CURRENT	:	6.0A
DC SUPPLY2	OUTPUT VOLT	:	5.5V
	MAX CURRENT	:	1.0A
NJZ-900A	AUTO CHECK SETUP	:	CH (M0) 0383, SCC=0, MIN=1234567890
	RF OUTPUT	:	-70dBm
	MODE	:	CALL PROCESS
SPL METER	RANGE	:	A - RANGE

2. MEASUREMENT CONDITION

MEASUREMENT TEMP. = 25 DEGREE C

3. TEST MODE SETUP

NONE

4. SPECIFICATION

NO.	ITEM	CONDITION	UNIT	SPEC	REMARKS
1	SOUND PLESSURE LEVEL	@ 1m	dBSPL	MIN 90	MAX.DIRECTION
2					

ALIGNMENT PROCEDURE FORM-1	EQUIPMENT SETTING	PAGE 17

MODEL	UNIT	BLOCK	ISSUE DATE	ISSUED
UH-053ZL	MAIN PCB		FEB. 05 2001	H.KAMBARA

TITLE	ESN WRITING	SUB TITLE		

REQUIRED EQUIPMENT AND JIG

NO.	JIG / EQUIPMENT NAME	JIG/EQUIP. MODEL NO.	QTY	REMARKS
1	MAIN PCB INITIAL JIG		1	
2	PC		1	COM1
3	LEVEL SHIFTER JIG	UA - 378	1	WITH AC ADAPTER
4	INTERFACE JIG	UH - 041Z - 4497 - 042Z	1	
5	DC SUPPLY		1	
6	CABLE	WZ - 1176	1	
7	RS-232C CABLE		1	
8	CONNECT JIG	UH - 052ZP - 4582	1	
9				

JIG AND EQUIPMENT SETTING

TOOLS / EQPT REQ'D FOR ADJUSTMENT

EQUIPMENT / JIG CONNECTION DIAGRAM

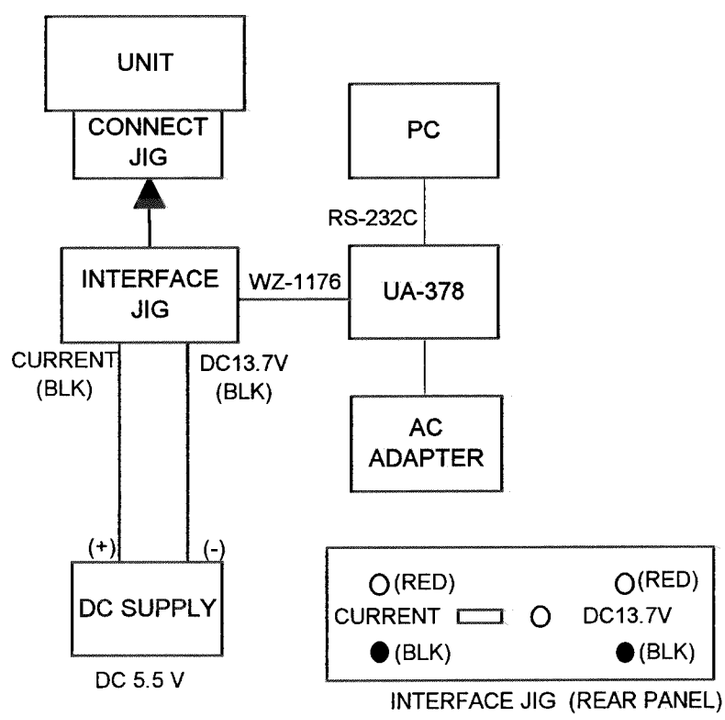

ALIGNMENT PROCEDURE FORM - 3

MODEL	UNIT	BLOCK	ISSUE DATE	ISSUED
UH-053ZL	MAIN PCB		FEB. 05 2001	H.KAMBARA

TITLE	ESN WRITING	SUB TITLE		REF DIAGRAM

STEP	CHECK POINT	SPEC	PROCEDURE
1	SERIAL NO.		CHECK THE SERIAL NO. OF UNIT CKECK THE SERIAL NO. INDICATED ON THE PC MONITOR.
2	SCREEN OF PC	OK	ESN WILLBE WRITTEN CORRECTLY
		NG	ERROR MESSAGE WILL COME APPEAR.

MODEL	SECTION	BLOCK	ISSUE DATE	ISSUED
UH-053ZL	MAIN PCB		FEB. 05 2001	H.KAMBARA

TITLE	ESN WRITING	SPEC.	

1. STANDARD CONDITION

PC COM1 : RS-232C LEVEL SHIFTER JIG MODE : UNIPRO

DC SUPPLY OUTPUT VOLT : 5.5V

MAX CURRENT : 1.0A

2. MEASUREMENT CONDITION

MEASUREMENT TEMP. = 25 DEGREE C

3. TEST MODE SETUP

NONE

4. SPECIFICATION

NO.	ITEM	CONDITION	UNIT	SPEC	REMARKS
1	RECEIVE CURRENT	PCB JIG CONNECT		40 - 80mA	JIG CONNECT
2	MAIN PCB INITIALIZE	PCB		OK	ADJUST SOFT

MODEL	UNIT	BLOCK	ISSUE DATE	ISSUED
UH-053ZL	MAIN UNIT		FEB. 05 2001	H.KAMBARA

TITLE	SPECIFICATIONS	SUB TITLE		REF DIAGRAM

BUYER'S SPEC REFERENCE ONLY. (cf. SPECIFICATIONS SHEETS)

STANDARD CONDITION

(FOR LINE)

VOLTAGE DC 5.50 +/- 0.02V

TEMP. 25 DEGREE C +/- 5

CH. 993, 384, 797

				FOR LINE		FOR BUYER'S		
No.	DESCRIPTION		UNIT	MIN.	MAX.	MIN.	MAX.	NOTE
1	TX FREQUENCY ERROR		ppm	-2.2	2.2	-2.5	2.5	-30 TO +60 DEG.C
2	TX POWER	PL2	dBm	23.8	29.3	23.8	29.8	-30 TO +60 DEG.C
		PL3	dBm	20.3	25.3	19.8	25.8	-30 TO +60 DEG.C
		PL4	dBm	16.3	21.3	15.8	21.8	-30 TO +60 DEG.C
		PL5	dBm	12.3	17.3	11.8	17.8	-30 TO +60 DEG.C
		PL6	dBm	8.3	13.3	7.8	13.8	-30 TO +60 DEG.C
		PL7	dBm	4.3	9.3	3.8	9.8	-30 TO +60 DEG.C
3	TX AUDIO	300Hz	dB	-15.5	-8.5	-15.5	-8.5	REFERENCE 1 kHz
	FREQ. RES	3kHz	dB	4.5	10.5	4.5	10.5	
4	TX MOD LIMITING		kHz		11.0		12.0	-30 TO +60 DEG.C
5	DATA DEVIATION		kHz	7.5	8.5	7.2	8.8	-30 TO +60 DEG.C
6	SAT	5970Hz	kHz					
	DEVIATION	6000Hz	kHz	1.90	2.10	1.80	2.20	-30 TO +60 DEG.C
		6030Hz	kHz					
7	ST. DEVIATION		kHz	7.5	8.5	7.2	8.8	-30 TO +60 DEG.C
8	SAT	5970Hz	Hz	5969	5971	5969	5971	
	FREQUENCY	6000Hz	Hz	5999	6001	5999	6001	
		6030Hz	Hz	6029	6031	6029	6031	
9	ST. FREQUENCY		kHz	9.999	10.001	9.999	10.001	
10	TX DISTORTIN & NOISE		dB			26.0		-30 TO +60 DEG.C

MODEL	UNIT	BLOCK	ISSUE DATE	ISSUED
UH-053ZL	MAIN UNIT		FEB. 05 2001	H.KAMBARA

TITLE	SPECIFICATIONS	SUB TITLE		REF DIAGRAM

UNIT

No.	DESCRIPTION		UNIT	FOR LINE MIN.	FOR LINE MAX.	FOR BUYER'S MIN.	FOR BUYER'S MAX.	NOTE
11	CARRIER ON STATE		dBm				-60.0	
12	CONDUCTED SPURIOUS EMISSION		dB				-40.7	
13	RX AUDIO FREQ	300Hz	dB	9.0	23.0	9.0	23.0	REFERENCE 1 kHz
	RESPONSE	3kHz	dB	-31.0	-17.0	-31.0	-17.0	
14	RX HUM & NOISE		dB				-32.0	
15	RX DISTORTION		%		4.0		5.0	
16	RX 12dB SINAD		dBm			-116.0		-20 TO +50 DEG.C
	(INPUT 8kHz DEV. 1kHz)					-113.0		-30 TO +60 DEG.C
17	RX SINAD @ -116dBm		dB	12.0				INPUT 8kHz DEV. 1kHz
18	I.M.D		dB			65.0		+/-60&120Hz
19	SPURIOUS INTERFERENCE		dB			60.0		
20	CONDUCTED SPURIOUS EMISSION		dBm				-47.0	
21	ADJACENT CHANNEL DESENSITIZATION		dB			16.0		
22	ALTERNATE CHANNEL DESENSITIZATION		dB			60.0		
23	STBY CURRENT		mA		0.1		0.1	DC 5.50V+/-0.1V
24	TALK CURRENT		mA		700		730	DC 5.50V+/-0.1V ch=383
25	SIREN SOUND LEVEL		dBspl			90		at 100cm, A Range