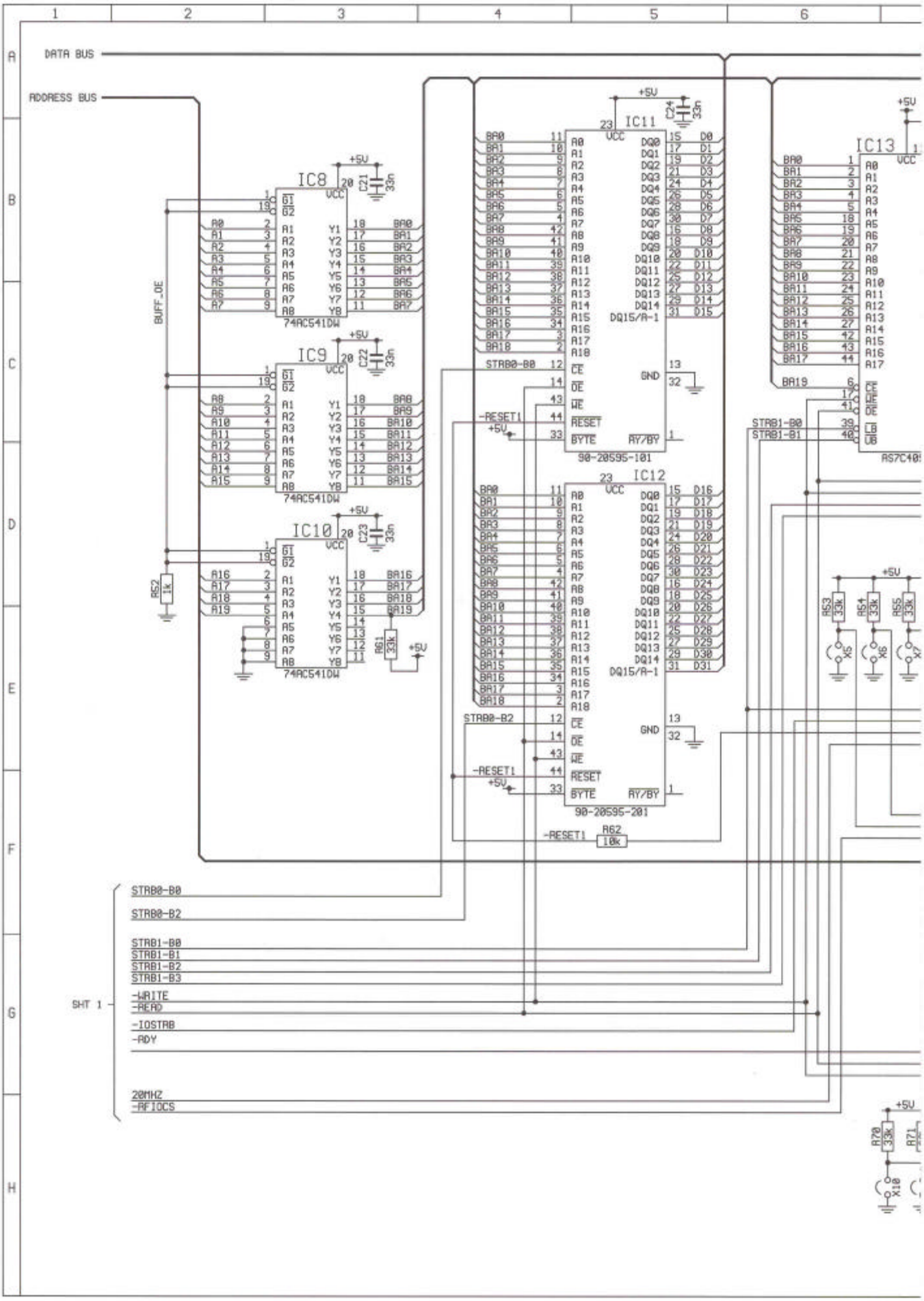
DATA BUS
ADDRESS BUS
BUFF_OE
IC8
74AC541DW
IC9
74AC541DW
IC10
74AC541DW
IC11
90-20595-101
IC12
90-20595-201
IC13
AS7C40
+5V
C21 33n
C22 33n
C23 33n
C24 33n
R52 1k
R61 33k
R62 10k
R53 33k
R54 33k
R55 33k
R70 33k
STRB0-B0
STRB0-B2
STRB1-B0
STRB1-B1
STRB1-B2
STRB1-B3
-WRITE
-READ
-IOSTRB
-RDY
20MHZ
-RFIOCS
SHT 1
-RESET1

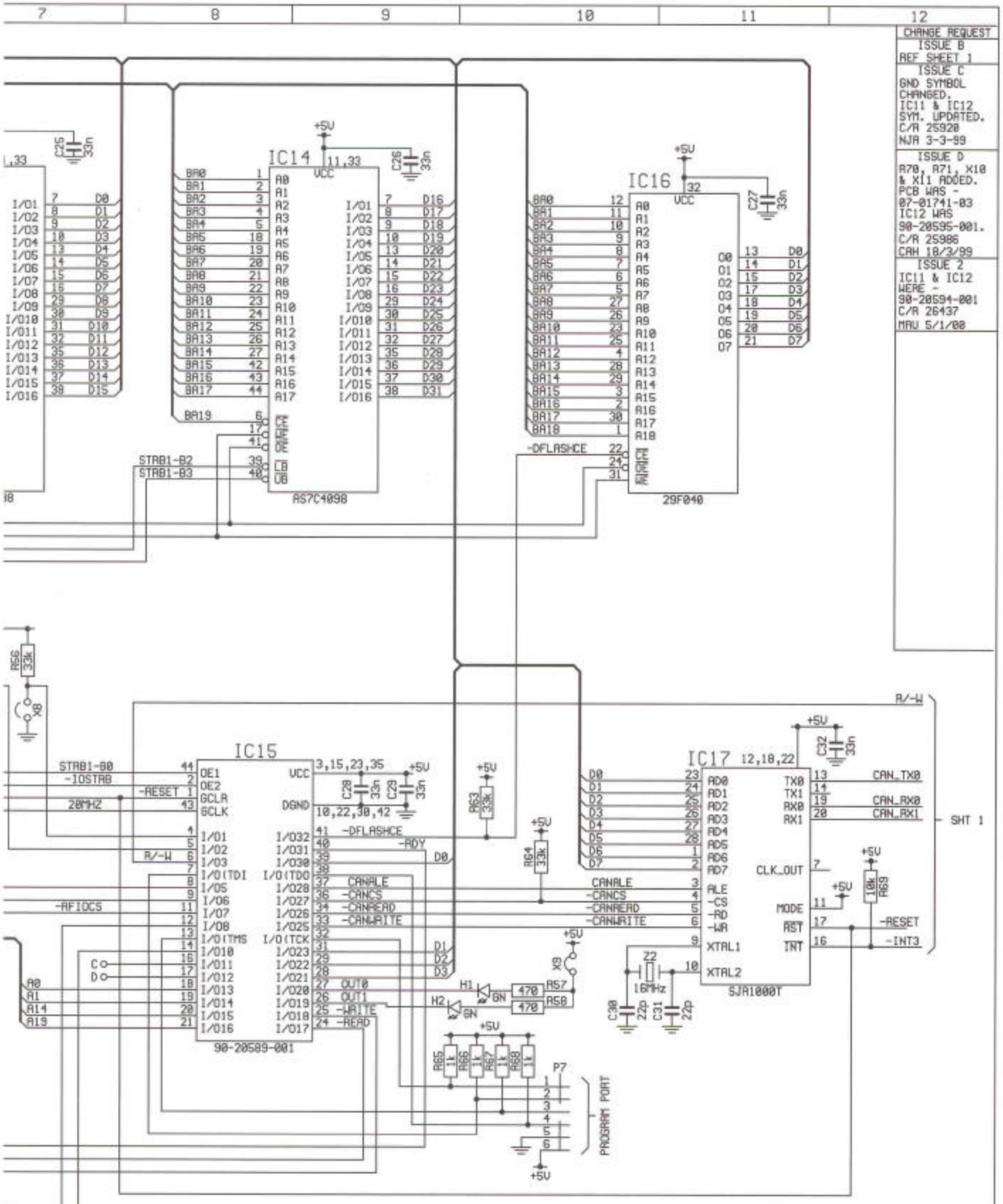


| | GND | +5V |
|---|---|---|
| IC8, 9 & 10 | 10 | 20 |
| IC11 & IC12 | 13,32 | 23 |
| IC13 & IC14 | 12,34 | 11,33 |
| IC15 | 10,22,30,42 | 3,15,23,35 |
| IC16 | 16 | 32 |
| IC17 | 8,15,21 | 12,18,22 |