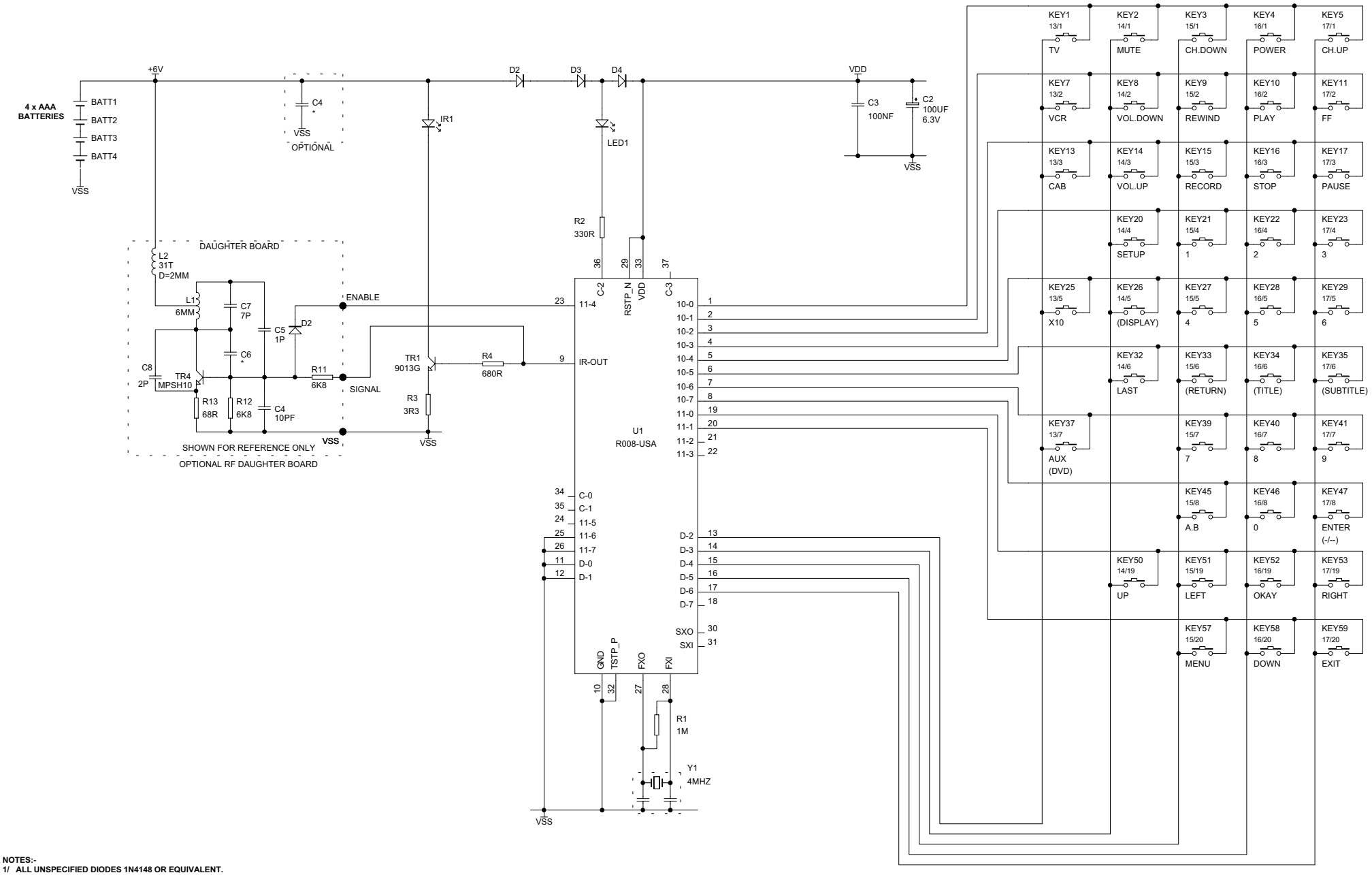


**NOTES:-**

1/ ALL UNSPECIFIED DIODES 1N4148 OR EQUIVALENT.
2/ ALL UNSPECIFIED DAUGHTER BOARD CAPACITORS ARE SMD TYPE.
3/ ALL UNSPECIFIED DAUGHTER BOARD RESISTORS ARE SMD TYPE.
4/ ALL UNSPECIFIED RESISTORS ARE 0.125W 5%.
5/ ALL UNSPECIFIED CAPACITORS ARE AXIAL MLC TYPE.

"*" DENOTES COMPONENT NOT INSTALLED

| | | | |
|---|---|---|---|
| Error : PICO.WMF File Not Found | DO NOT SCALE DRAWING | TITLE: | |
| | DRN BKW DATE 9/8/00 | X10 UR73/74 IR REMOTE | |
| | APPD. DATE | FIRST DRAWN 9/8/00 | PRINT DATE 11:14:41 21-Aug-2000 / SHEET No. 1 of 1 |
| | FILE D:\DATA\SCH\R8-UR74A.SCH | REVISION DATE 9/8/00 | REV. A |

PICO ELECTRONICS Ltd., Eastfield Industrial Estate, Glenrothes, Fife, KY7 4NZ, SCOTLAND