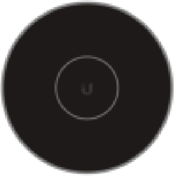

a

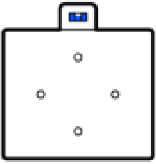

b

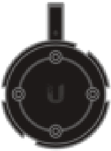

c

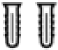

d

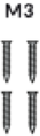

e

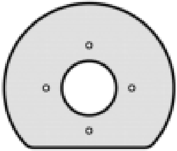

f

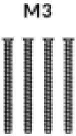

g

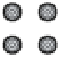

h

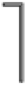

i

1

Ⓐ

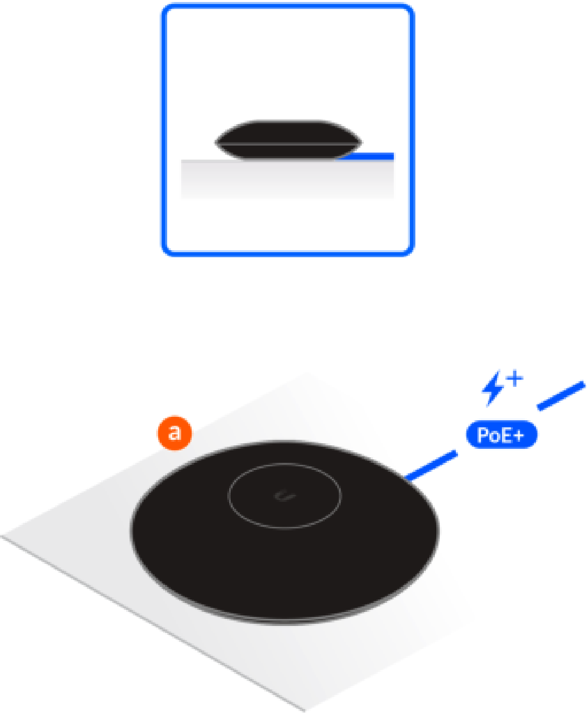

B

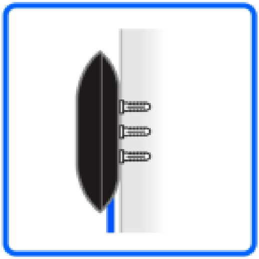

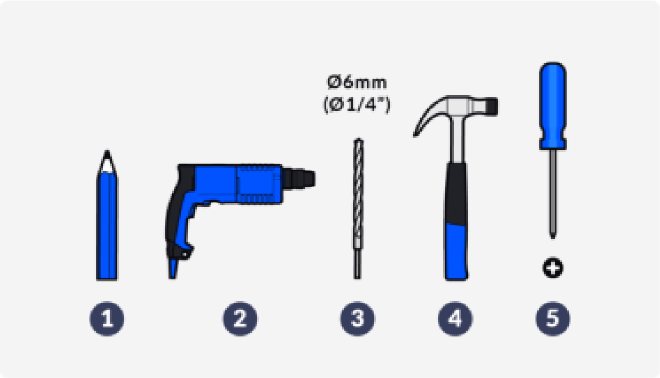
Ø6mm
(Ø1/4")
1
2
3
4
5

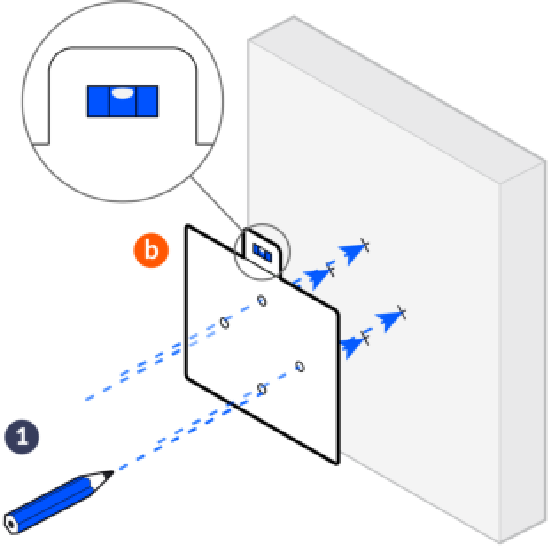

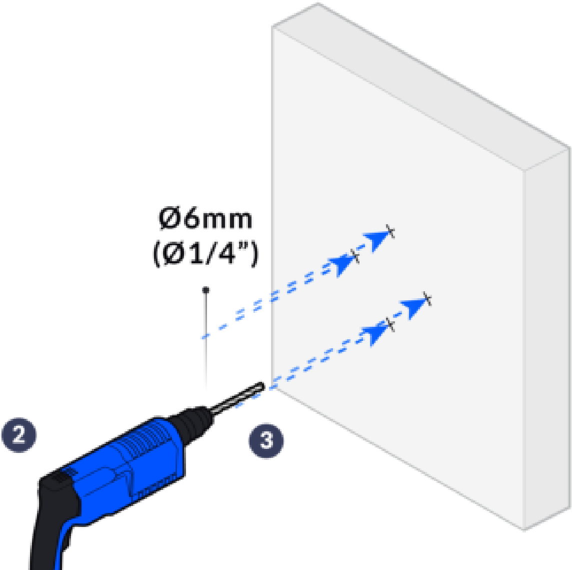

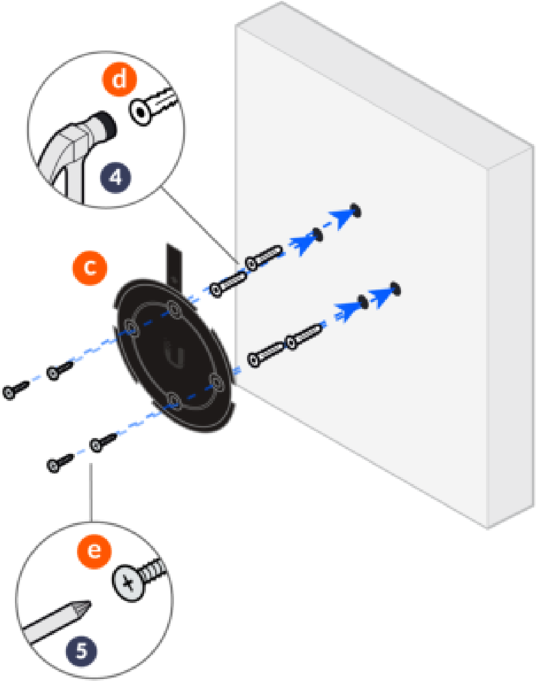

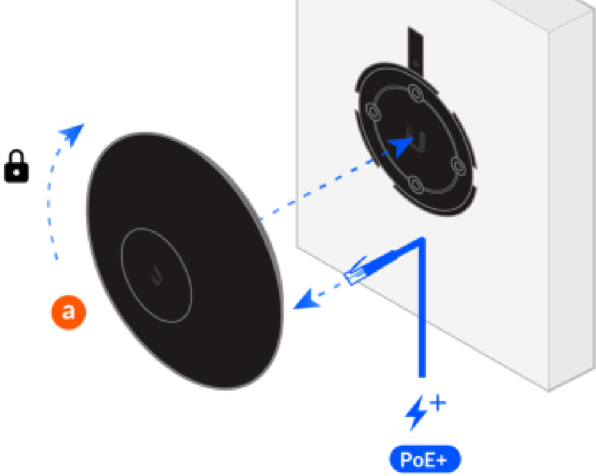

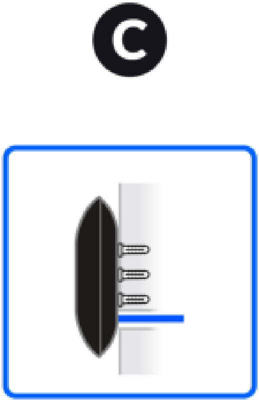

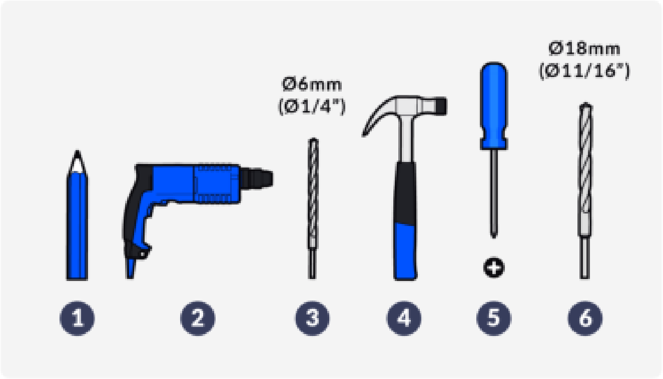
Ø6mm
(Ø1/4")
Ø18mm
(Ø11/16")
1
2
3
4
5
6

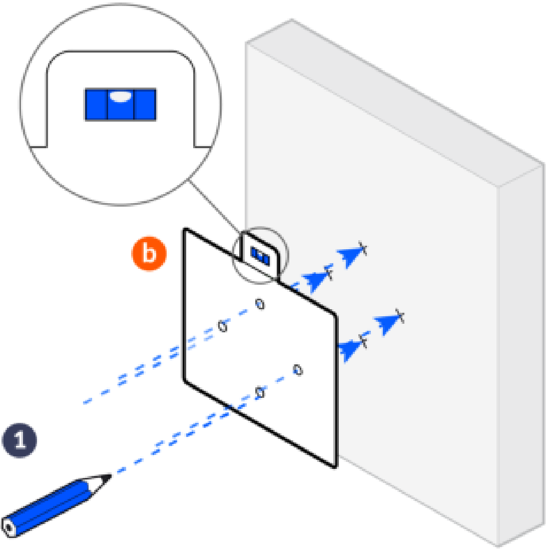

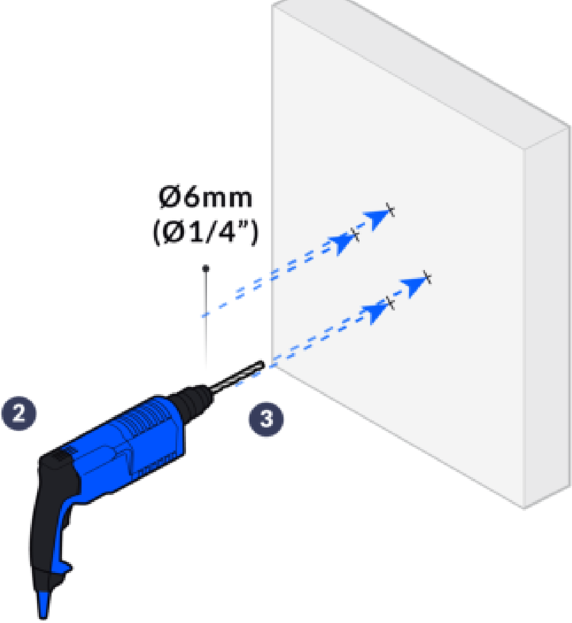

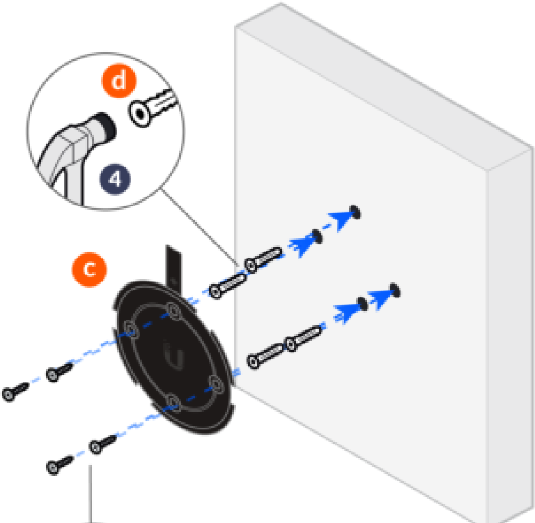

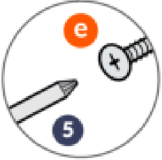

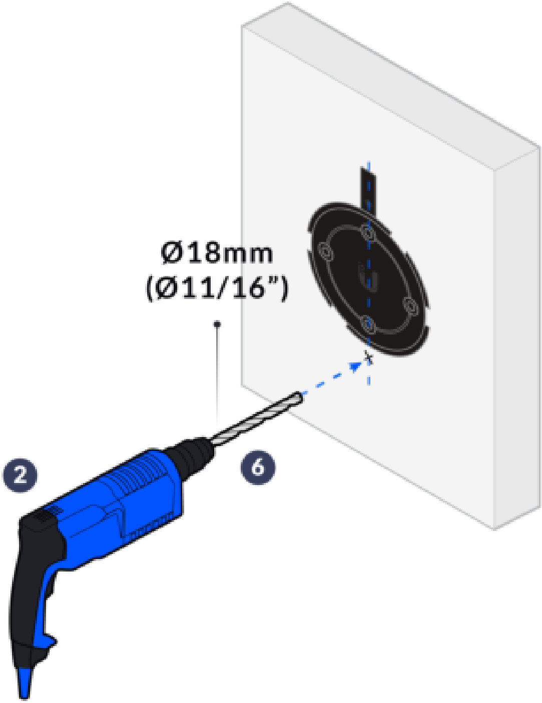
Ø18mm
(Ø11/16")
2
6

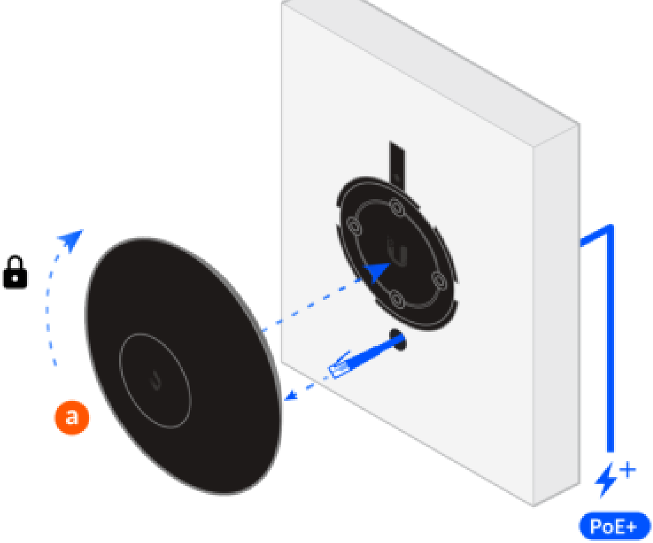

D

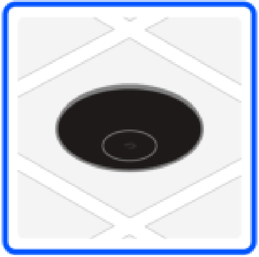

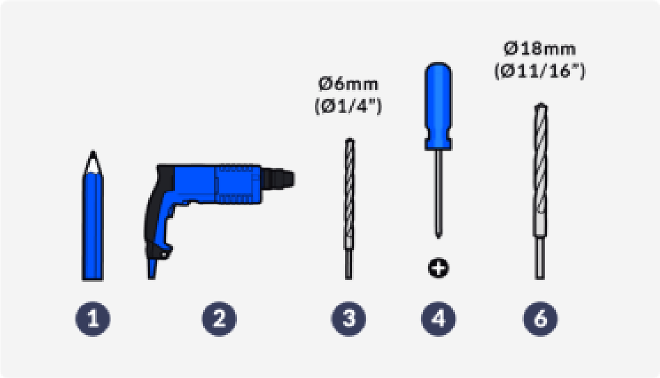
Ø6mm
(Ø1/4")
Ø18mm
(Ø11/16")
1
2
3
4
6

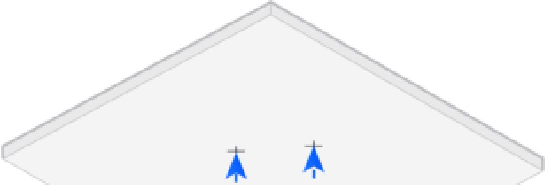

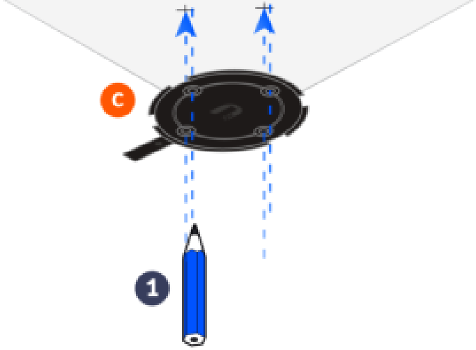

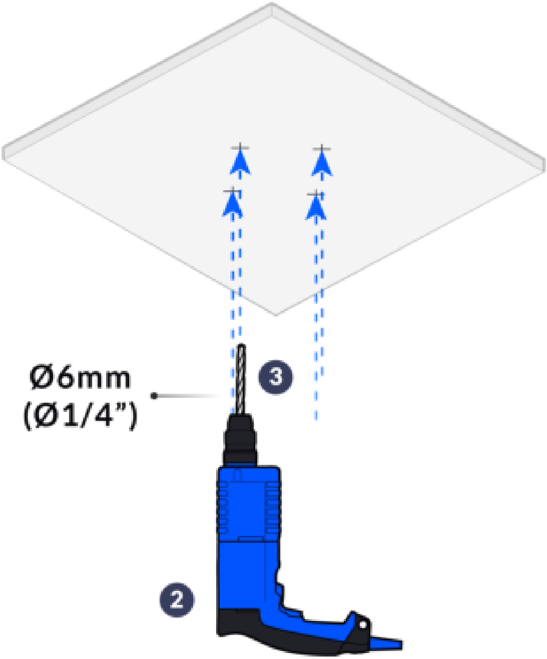

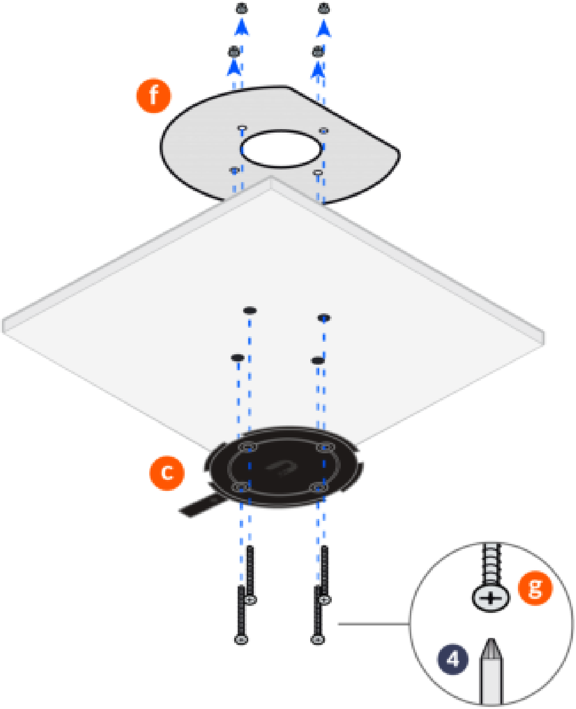

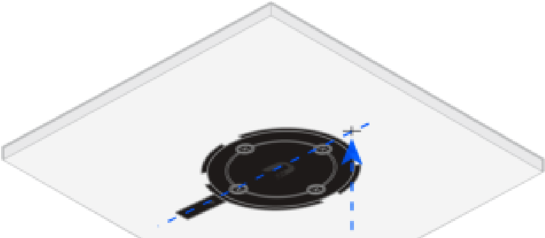

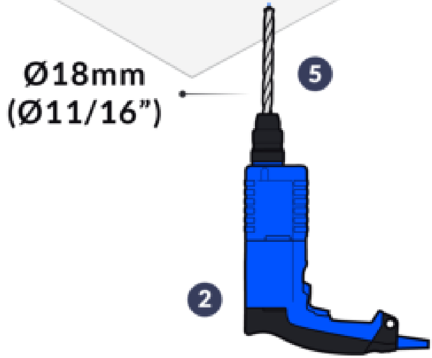
Ø18mm
(Ø11/16")
5
2

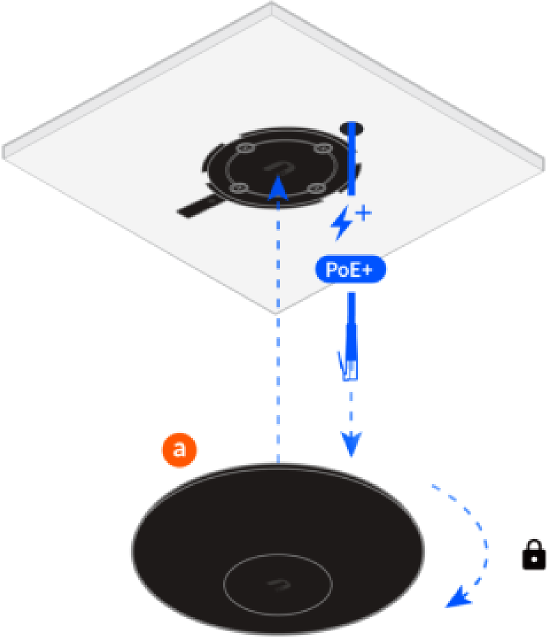

2

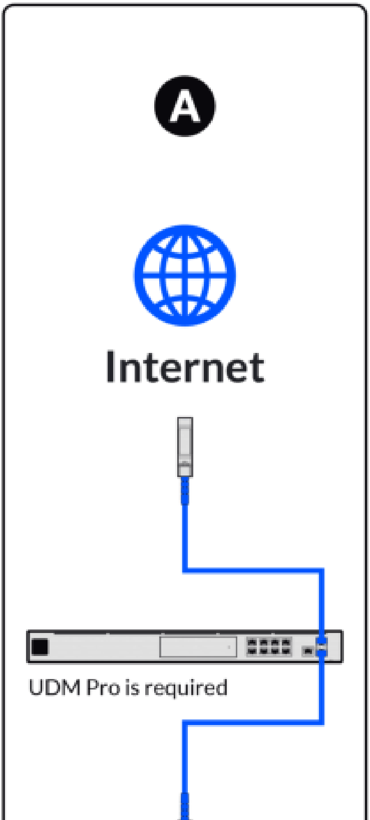
A
Internet
UDM Pro is required

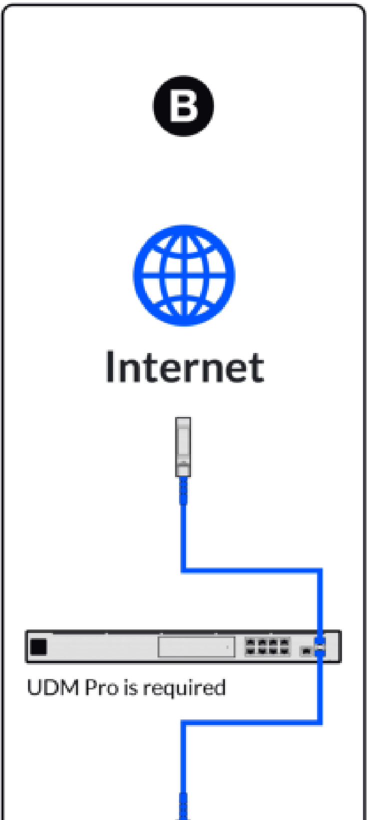
B
Internet
UDM Pro is required

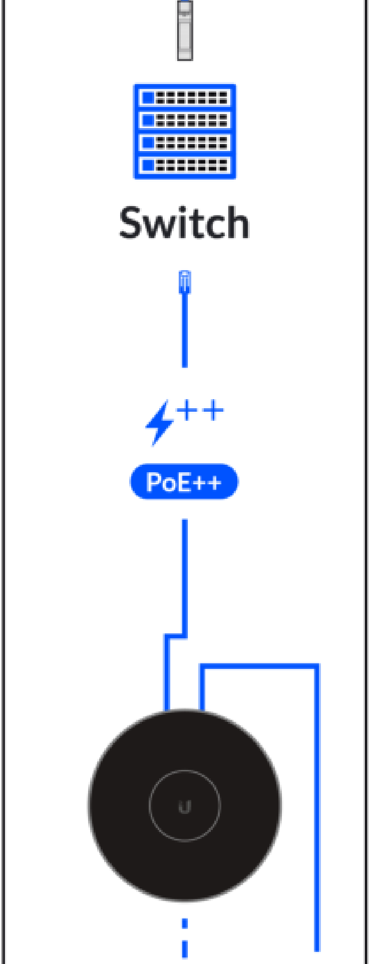

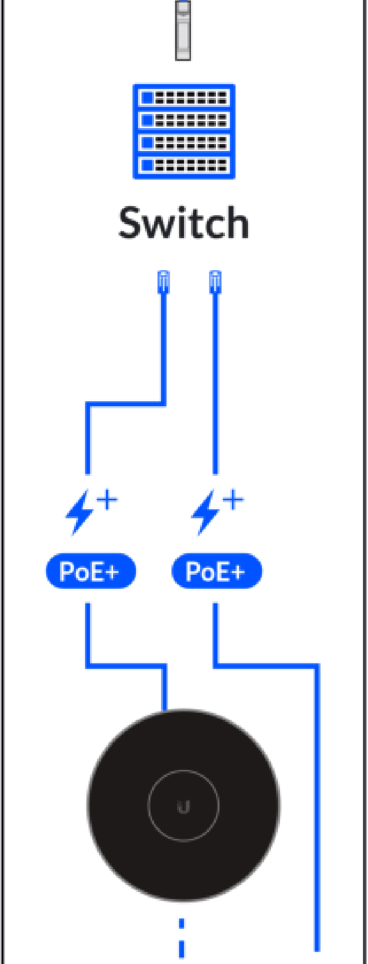
Switch
PoE+
PoE+

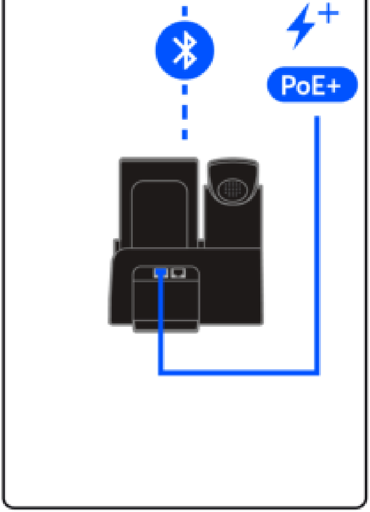

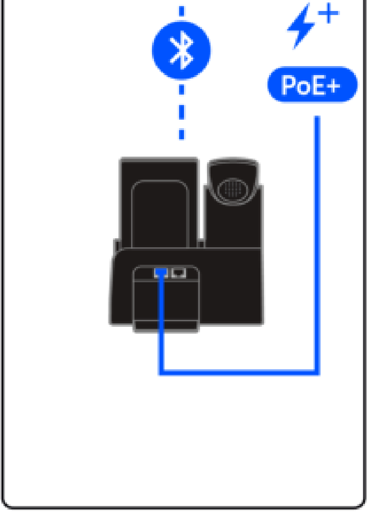

3

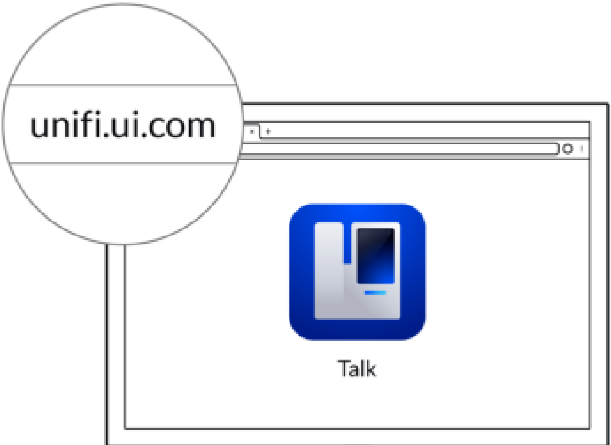
unifi.ui.com
Talk

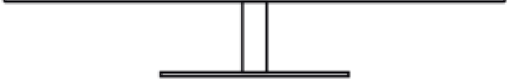

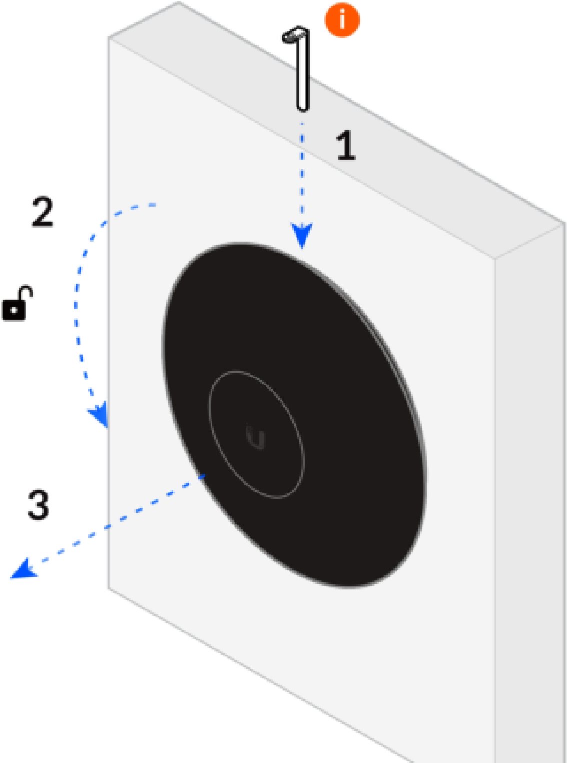

Get Answers

help.ui.com

UI Support