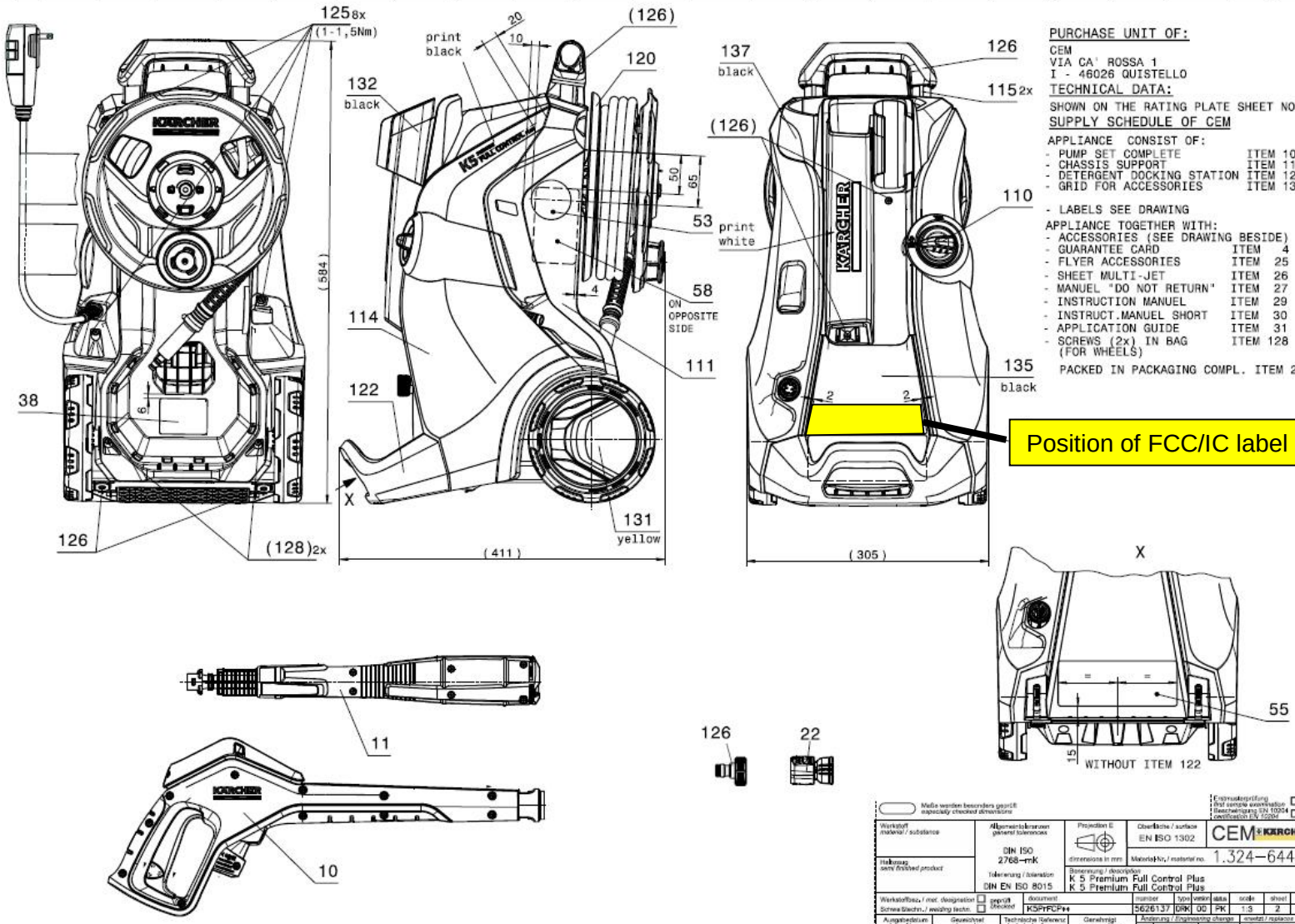
125 8x
(1-1,5Nm)
print black
20
10
(126)
120
132
black
137
black
126
115 2x
(126)
110
53
print white
58
ON OPPOSITE SIDE
114
111
122
135
black
38
6
126
(128) 2x
X
131
yellow
(584)
(411)
(305)
2
2
4
50
65
Position of FCC/IC label
X
55
15
WITHOUT ITEM 122
11
10
126
22
PURCHASE UNIT OF:
CEM
VIA CA' ROSSA 1
I - 46026 QUISTELLO
TECHNICAL DATA:
SHOWN ON THE RATING PLATE SHEET NO.1
SUPPLY SCHEDULE OF CEM
APPLIANCE CONSIST OF:
- PUMP SET COMPLETE ITEM 109
- CHASSIS SUPPORT ITEM 112
- DETERGENT DOCKING STATION ITEM 123
- GRID FOR ACCESSORIES ITEM 136
- LABELS SEE DRAWING
APPLIANCE TOGETHER WITH:
- ACCESSORIES (SEE DRAWING BESIDE)
- GUARANTEE CARD ITEM 4
- FLYER ACCESSORIES ITEM 25
- SHEET MULTI-JET ITEM 26
- MANUEL "DO NOT RETURN" ITEM 27
- INSTRUCTION MANUEL ITEM 29
- INSTRUCT.MANUEL SHORT ITEM 30
- APPLICATION GUIDE ITEM 31
- SCREWS (2x) IN BAG (FOR WHEELS) ITEM 128
PACKED IN PACKAGING COMPL. ITEM 2
CEM KÄRCHER
1.324-644.0
K 5 Premium Full Control Plus
K 5 Premium Full Control Plus
DIN ISO 2768-mK
DIN EN ISO 8015
EN ISO 1302
K5PrFCP++
5626137
AW02881
AW02881
2112510