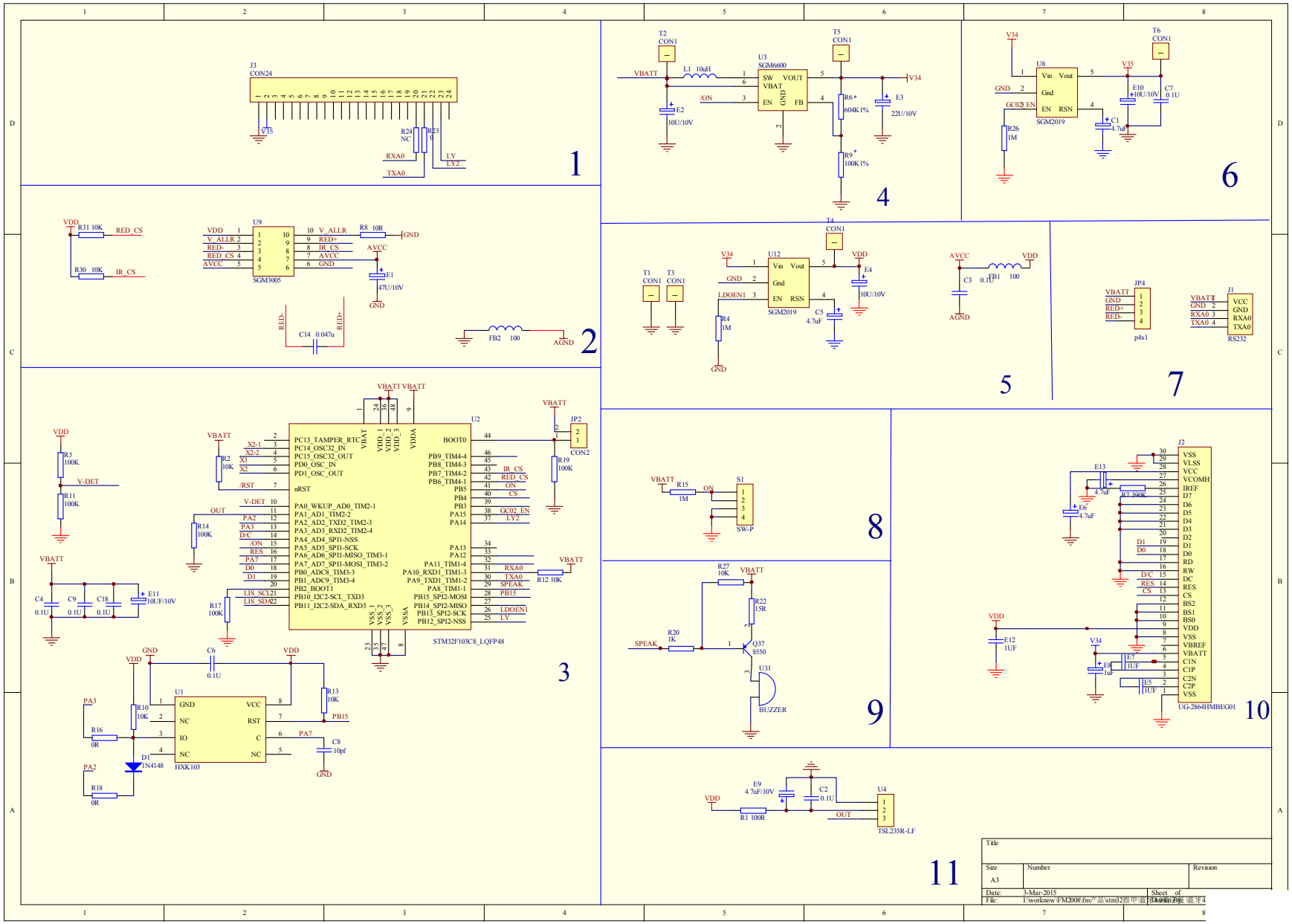
J3
CON24
V35
R24
NC
R23
0
RXA0
TXA0
LY
LY2
1
VDD
R31 10K
RED_CS
R30 10K
IR_CS
U9
SGM3005
VDD
V_ALLR
RED-
RED_CS
AVCC
V_ALLR
RED+
IR_CS
AVCC
GND
R8 10R
GND
E1
47U/10V
GND
RED-
RED+
C14 0.047u
FB2 100
AGND
2
VBATT
VBATT
U2
STM32F103C8_LQFP48
PC13_TAMPER_RTC
PC14_OSC32_IN
PC15_OSC32_OUT
PD0_OSC_IN
PD1_OSC_OUT
nRST
PA0_WKUP_AD0_TIM2-1
PA1_AD1_TIM2-2
PA2_AD2_TXD2_TIM2-3
PA3_AD3_RXD2_TIM2-4
PA4_AD4_SPI1-NSS
PA5_AD5_SPI1-SCK
PA6_AD6_SPI1-MISO_TIM3-1
PA7_AD7_SPI1-MOSI_TIM3-2
PB0_ADC8_TIM3-3
PB1_ADC9_TIM3-4
PB2_BOOT1
PB10_I2C2-SCL_TXD3
PB11_I2C2-SDA_RXD3
BOOT0
PB9_TIM4-4
PB8_TIM4-3
PB7_TIM4-2
PB6_TIM4-1
PB5
PB4
PB3
PA15
PA14
PA13
PA12
PA11_TIM1-4
PA10_RXD1_TIM1-3
PA9_TXD1_TIM1-2
PA8_TIM1-1
PB15_SPI2-MOSI
PB14_SPI2-MISO
PB13_SPI2-SCK
PB12_SPI2-NSS
VDD
R5
100K
V-DET
R11
100K
VBATT
R2
10K
OUT
R14
100K
R17
100K
VBATT
JP2
CON2
R19
100K
VBATT
R12 10K
VBATT
C4
0.1U
C9
0.1U
C18
0.1U
E11
10UF/10V
GND
VDD
C6
0.1U
VDD
U1
HXK103
GND
NC
IO
NC
VCC
RST
C
NC
R10
10K
R13
10K
PB15
PA3
R16
0R
PA7
C8
10pf
GND
D1
1N4148
PA2
R18
0R
3
T2
CON1
VBATT
L1 10uH
/ON
U3
SGM6600
SW
VOUT
VBAT
EN
GND
FB
E2
10U/10V
T5
CON1
V34
R6*
604K1%
E3
22U/10V
R9*
100K1%
4
V34
U8
SGM2019
Vin
Vout
Gnd
EN
RSN
GND
GC02_EN
R26
1M
V35
E10
10U/10V
C7
0.1U
T6
CON1
C1
4.7uF
6
T1
CON1
T3
CON1
V34
U12
SGM2019
Vin
Vout
Gnd
EN
RSN
GND
LDOEN1
R4
1M
GND
T4
CON1
VDD
E4
10U/10V
C5
4.7uF
5
AVCC
C3
0.1U
FB1 100
VDD
AGND
JP4
p4x1
VBATT
GND
RED+
RED-
J1
RS232
VBATT
GND
RXA0
TXA0
VCC
GND
RXA0
TXA0
7
VBATT
R15
1M
ON
S1
SW-P
8
R27
10K
VBATT
R22
15R
SPEAK
R20
1K
Q37
8550
U31
BUZZER
9
J2
UG-2864HMBEG01
VSS
VLSS
VCC
VCOMH
IREF
D7
D6
D5
D4
D3
D2
D1
D0
RD
RW
DC
RES
CS
BS2
BS1
BS0
VDD
VSS
VBREF
VBATT
C1N
C1P
C2N
C2P
VSS
E13
4.7uF
R7 390K
E6
4.7uF
D1
D0
D/C
RES
CS
VDD
E12
1UF
V34
E8
1uF
E7
1UF
E5
1UF
10
VDD
E9
4.7uF/10V
C2
0.1U
R1 100R
OUT
U4
TSL235R-LF
11
Title
Size
A3
Number
Revision
Date:
3-Mar-2015
File:
Sheet of