REV	DATE	DESCRIPTION	DRAWN BY
B	1/19/98	RELEASED	RWJ
C	2/25/98	PER ECR-7546	RWJ

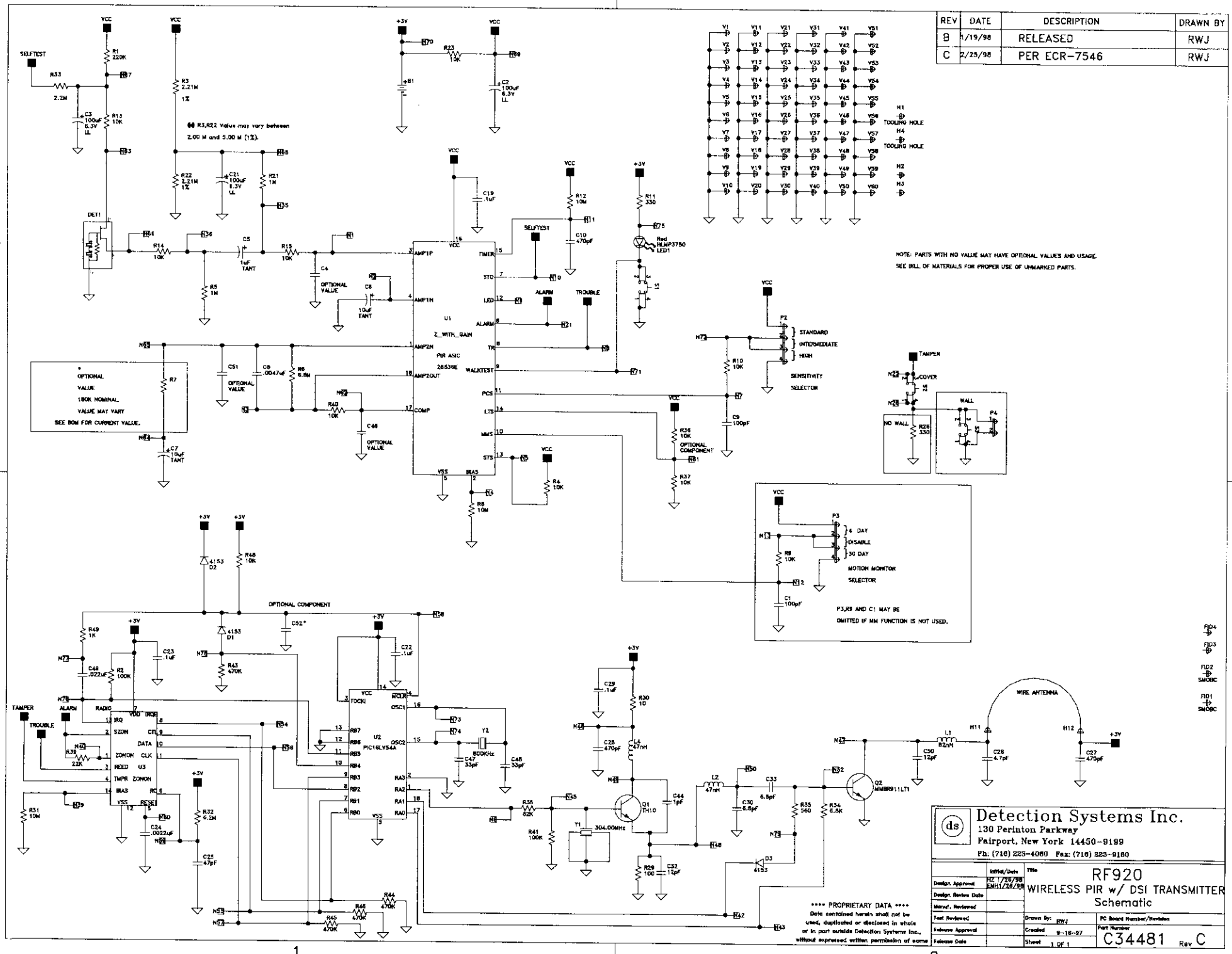

**** PROPRIETARY DATA ****
Data contained herein shall not be used, duplicated or disclosed in whole or in part outside Detection Systems Inc., without expressed written permission of same

Detection Systems Inc.
130 Perinton Parkway
Fairport, New York 14450-9199
Ph: (716) 223-4060 Fax: (716) 223-9160

	Initial/Date
Design Approval	HZ 1/26/98 EMH1/26/98
Design Review Date	
Manuf. Reviewed	
Test Reviewed	
Release Approval	
Release Date	

Title: RF920
WIRELESS PIR w/ DSI TRANSMITTER
Schematic

Drawn By: RWJ
Created: 9-16-97
Sheet: 1 OF 1
PC Board Number/Revision
Part Number: C34481 Rev C