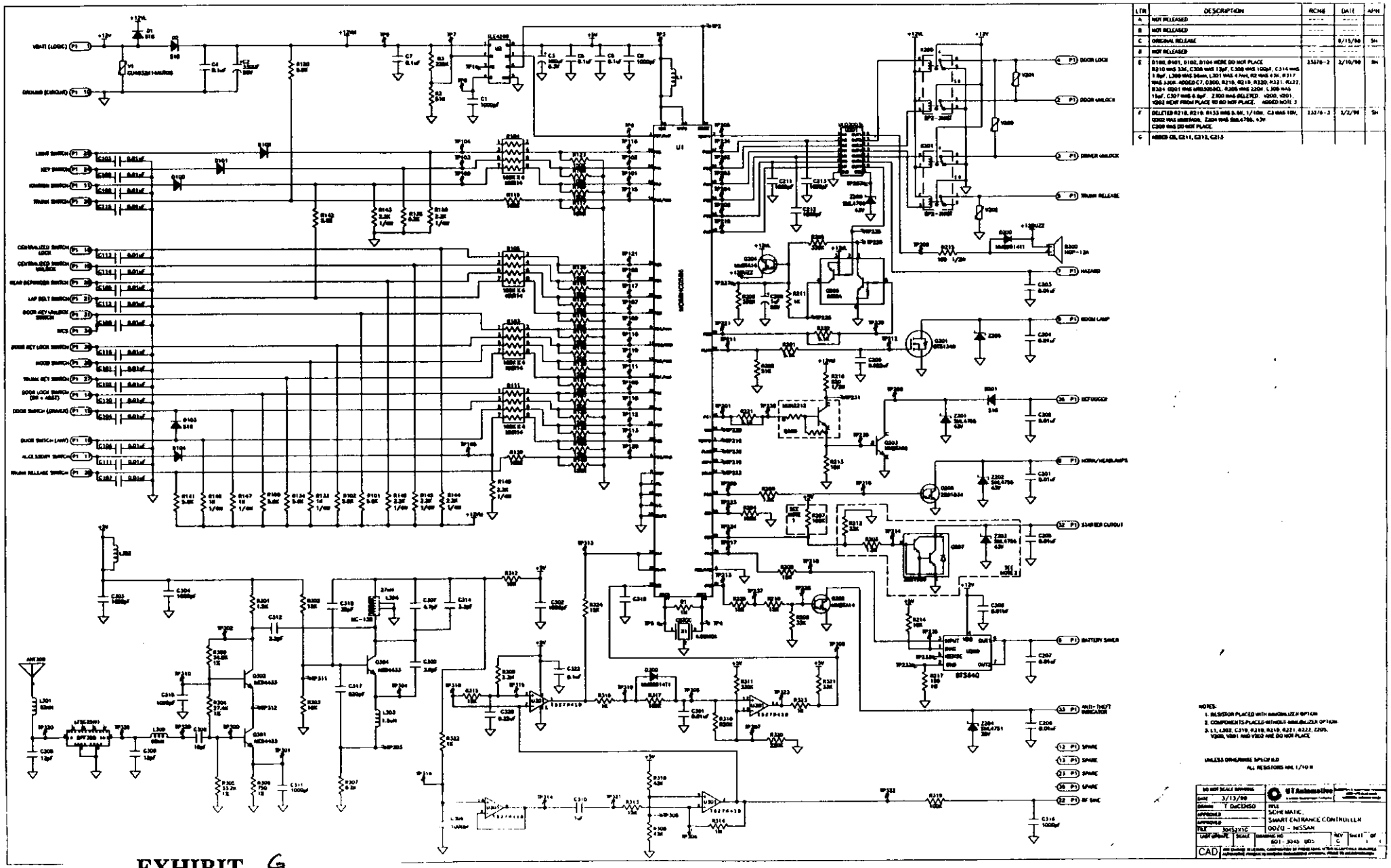

LTR	DESCRIPTION	ECN#	DATE	APVD
A	NOT RELEASED	----	----	
B	NOT RELEASED	----	----	
C	ORIGINAL RELEASE	----	9/15/98	SH
D	NOT RELEASED	----	----	
E	D100, D101, D102, D104 HERE DO NOT PLACE. R210 WAS 3.3K, C308 WAS 15pF, C308 WAS 100pF, C314 WAS 1.0pF, L300 WAS 54nH, L301 WAS 47nH, R2 WAS 4.3K, R317 WAS 330K. ADDED C7, C300, R218, R219, R220, R221, R222, R321, C301 WAS MMBD6050, R205 WAS 220K, L305 WAS 15pF, C307 WAS 6.8pF. Z300 WAS DELETED. V200, V201, V202 NOT PLACE TO DO NOT PLACE. ADDED NOTE 3	13376-2	2/10/99	SH
F	DELETED R210, R215, R133 WAS 5.6K, 1/10W. C3 WAS 10V, D302 WAS MMBT6055, Z204 WAS SMLJ4756, 43V. C300 WAS DO NOT PLACE.	13376-3	3/2/99	SH
G	ADDED C8, C211, C212, C213			

EXHIBIT G

Page 1 of 1

U of Mich file 415031-000

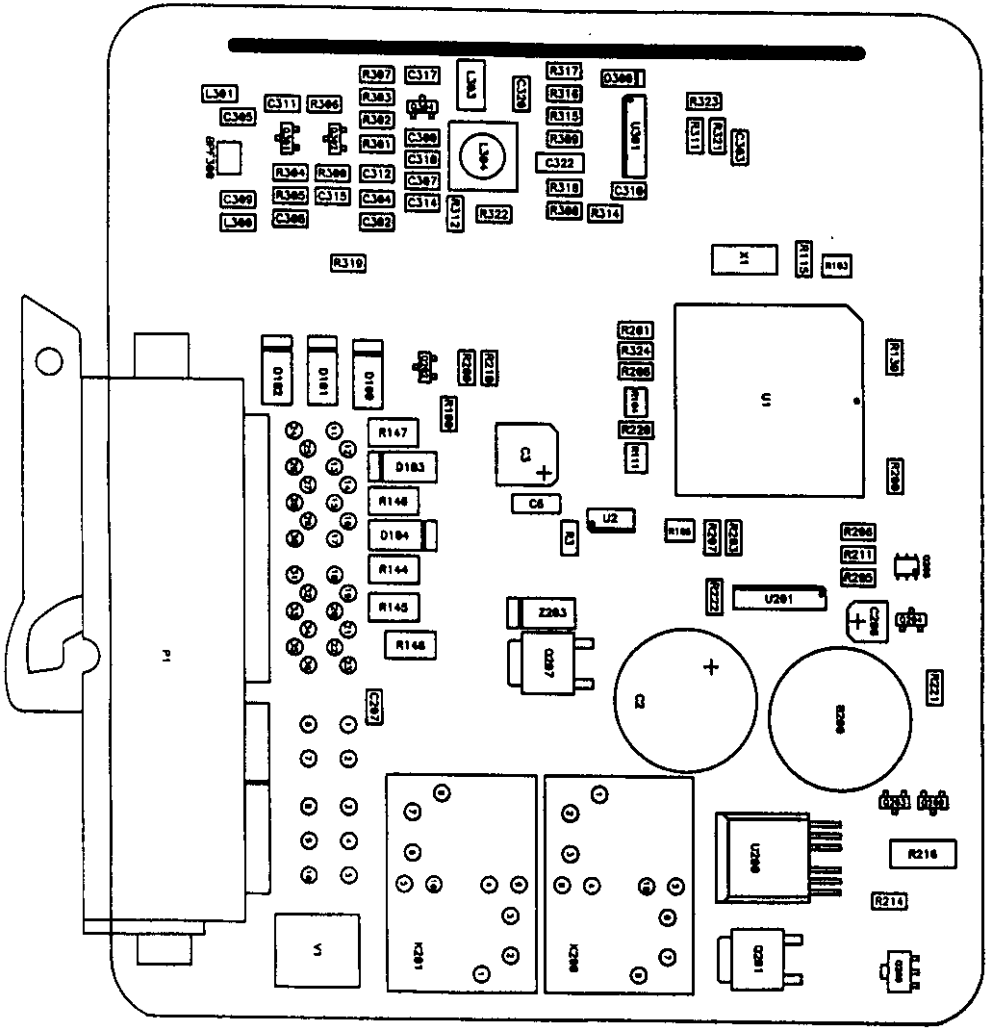

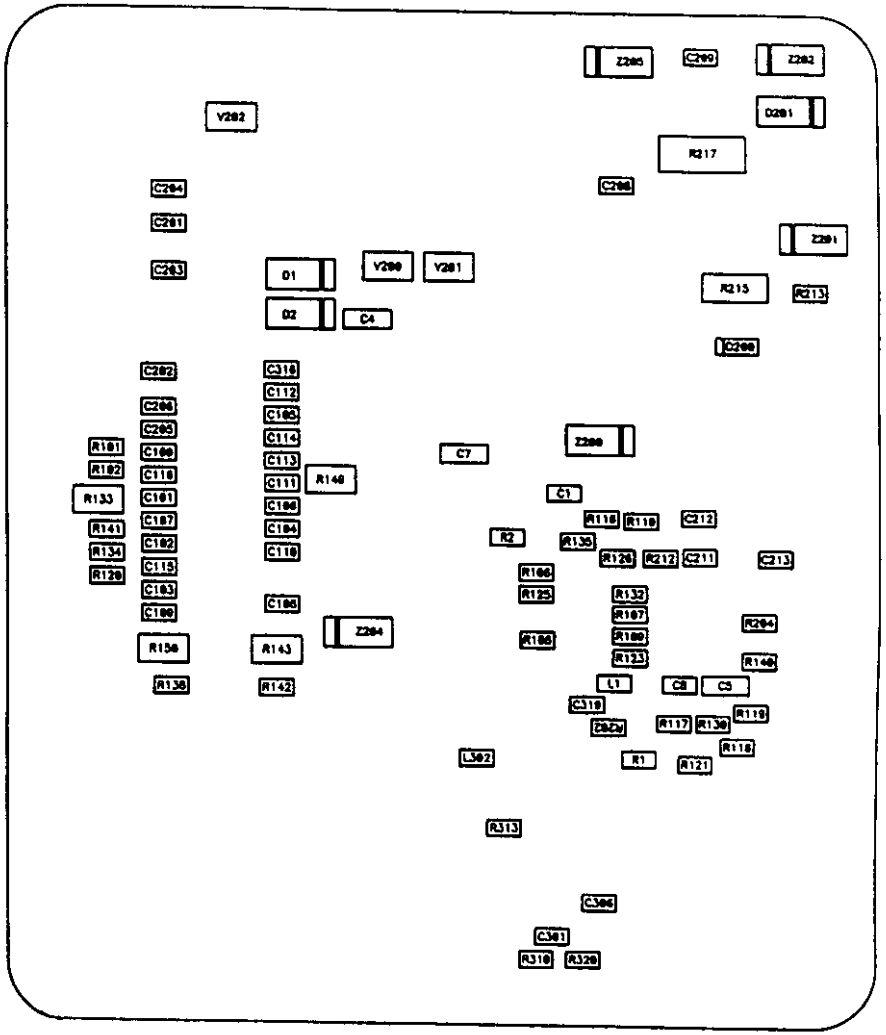

EXHIBIT H

Page 1 of 1

U of Mich file 415031-000