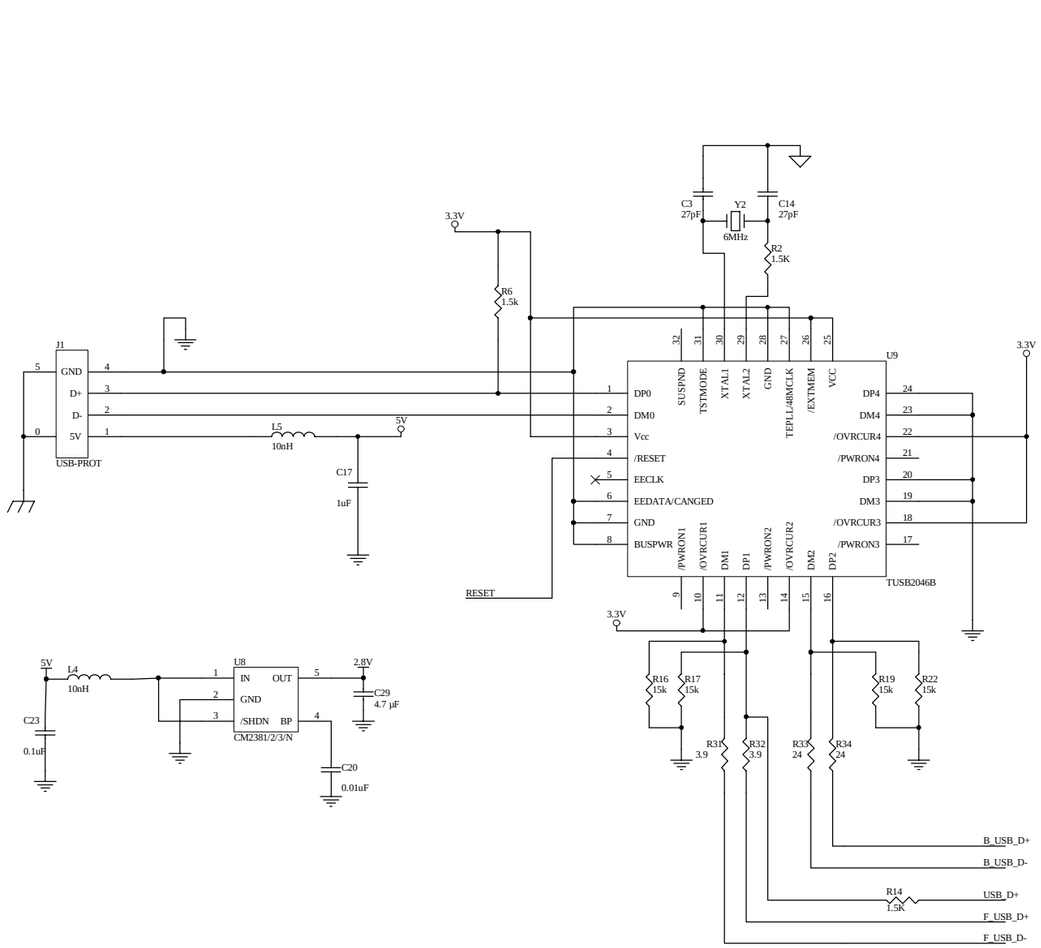

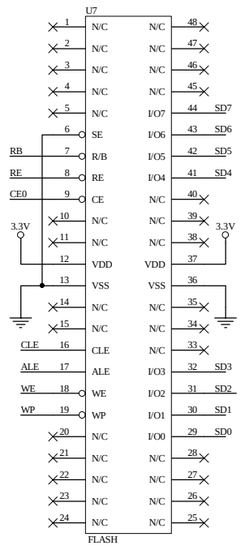

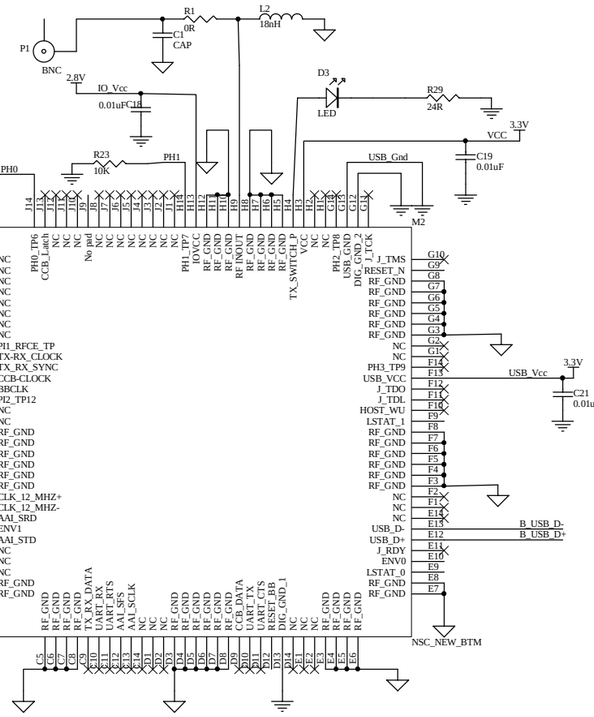

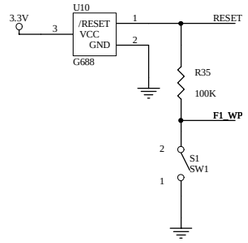

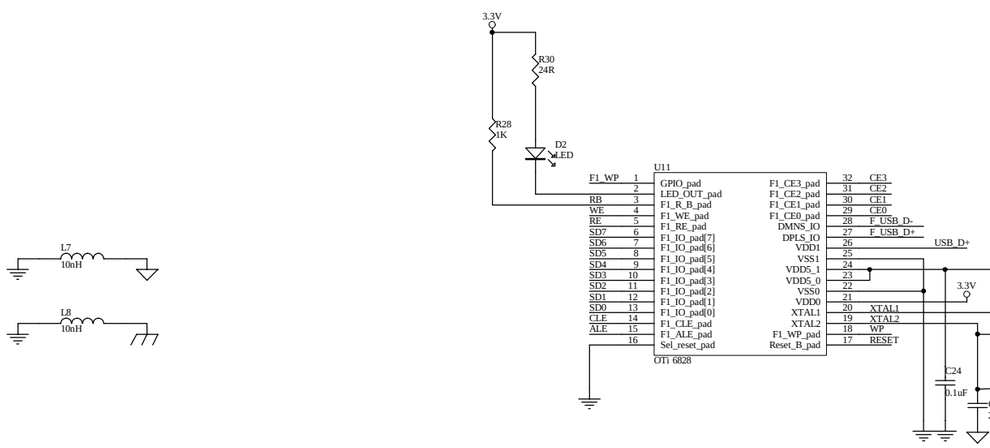

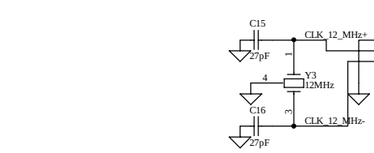

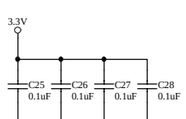

Title		
Size A2	Number	Revision
Date: 26-Jun-2003	Sheet of	
File: d:\My Documents\Product Data\FLASH\BT1112FTT\BT1112FTT96.Ddb		