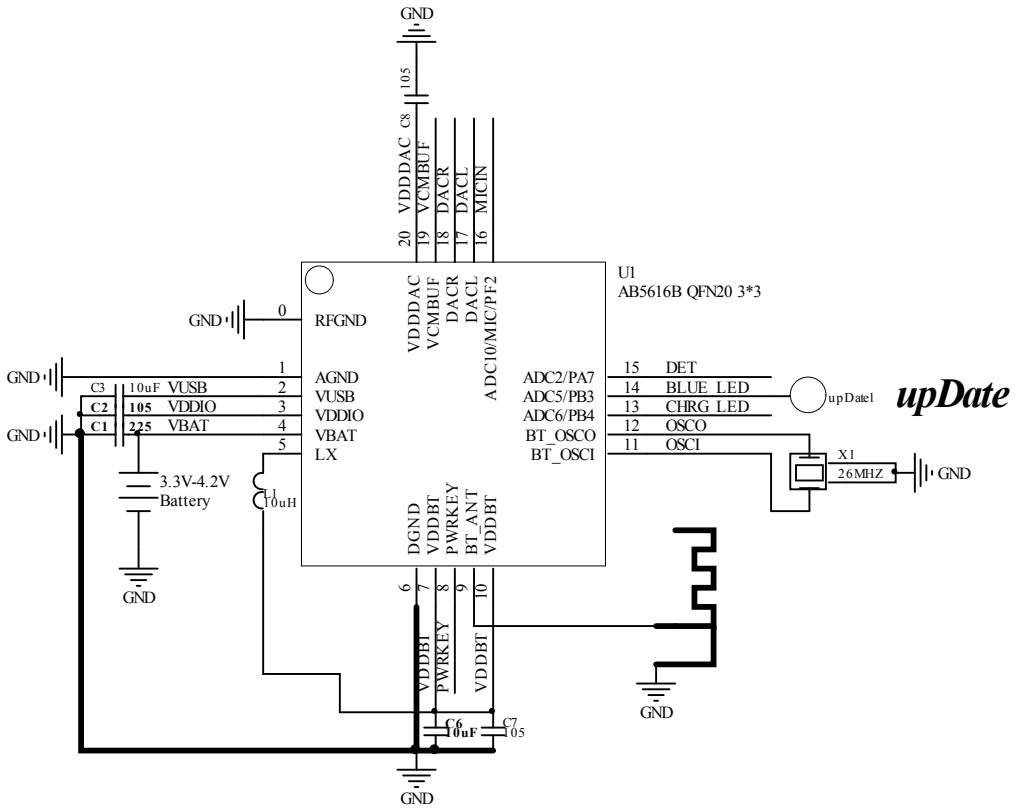

upDate

AB5616B QFN20-3*3

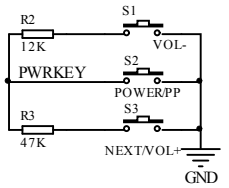

KEY

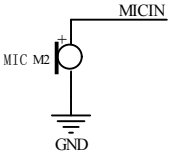

MIC

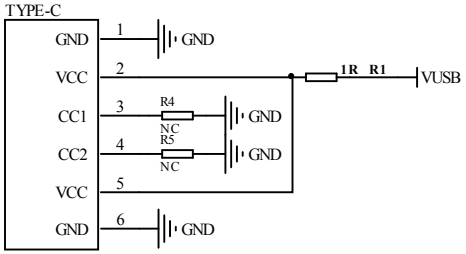

POWER

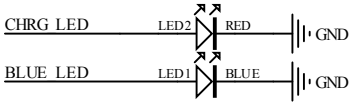

LED

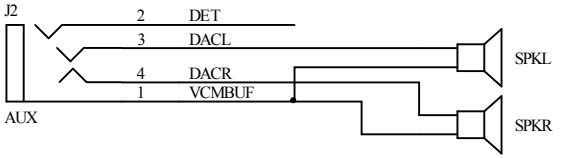

Earphone