MHX-900
Operating Manual

900 MHz Wireless
Spread-Spectrum OEM Modem

Revision 03 - May 12, 1999

Microhard Systems Inc. has made every effort to assure that this document is accurate and complete. However, the company reserves the right to make changes or enhancements to the manual and/or the product described herein at any time and without notice. Furthermore, Microhard Systems Inc. assumes no liability resulting from any omissions in this document, or out of the application or use of the device described herein.

Microhard Systems Inc.

Leaders in Wireless Telecom

Contents

1. Introduction
   - 1.0 Product Overview ... 1
   - 1.1 Features ... 1
   - 1.2 About this Manual ... 2
2. Initial Setup and Configuration
   - 2.0 Unpacking and Inspection ... 3
   - 2.1 Additional Requirements ... 3
   - 2.2 Connectors and Indicators ... 3
   - 2.3 Configuration ... 5
   - 2.4 Checking the Link ... 6
3. Configuration Options
   - 3.0 Command Line Interface ... 7
   - 3.1 AT Commands ... 8
     - A - Answer ... 8
     - D - Dial ... 8
     - E - Command Echo ... 8
     - I - Identification ... 8
     - O - Online Mode ... 8
     - Q - Quiet Mode ... 9
     - V - Result Codes Display ... 9
     - W - Connection Result ... 9
     - Z - Reset Modem and load stored configuration ... 9
     - &C - DCD (Data Carrier Detect) ... 9
     - &D - DTR (Data Terminal Ready) ... 9
     - &F - Load Factory default configuration ... 9
     - &K - Handshaking ... 9
     - &S - DSR (Data Set Ready) ... 10
     - &V - View Configuration ... 10
     - &W - Write Configuration to memory ... 10
     - Sxxx? - Read S register value ... 10
     - Sxxx=yyy - Set S register value ... 10
   - 3.2 Command Result Codes ... 10
   - 3.3 S Registers ... 11
     - S Register 2 - Escape Code ... 11
     - S Register 3 - CR Control Code ... 11
     - S Register 4 - Linefeed Control Code ... 11
     - S Register 5 - Backspace Control Code ... 11
     - S Register 101 - Operating Mode ... 12
     - S Register 102 - Serial Baud Rate ... 13
     - S Register 103 - Wireless Link Rate ... 14
     - S Register 104 - Network Address ... 14
     - S Register 105 - Unit Address ... 14
     - S Register 106 - Hopping Pattern ... 14
     - S Register 107 - Encryption Key ... 14
     - S Register 108 - Output Power Level ... 15
     - S Register 109 - Hopping Interval ... 16
     - S Registers 111 to 113 - Packet Parameters - Point to Point Mode ... 16
     - S Registers 111 to 115 - Packet Parameters - Point to Multipoint Mode ... 17

Appendices

A. Modem Command Summary ... 19
B. Serial Interface ... 21
C. Sample Schematic Diagram ... 23
D. Modem Setup Overview ... 25
E. Technical Specifications ... 27
F. Glossary ... 29

1. Introduction

1.0 Product Overview

Congratulations on choosing the MHX-900 wireless modem module! Your new MHX-900 modem is a state-of-the-art, 900 MHz frequency-hopping spread-spectrum communications transceiver module. When the MHX-900 module is incorporated into the design of new or existing equipment, terminal devices (DTEs) up to 30 km (or more)[1] apart will be capable of establishing high-speed[2] communications wirelessly.

MHX-900 modules provide a practical and reliable alternative to using traditional analog phone-line modems or "permanent wire" serial cable (RS-232) connections for data communications between terminal equipment. Moreover, wireless data communications using the MHX-900 module means you will benefit from:

- greater flexibility and freedom to relocate terminal equipment,
- eliminated requirement for access to wire-based transfer media such as telephone lines,
- the ability to communicate through walls, floors, and many other obstacles.

While the MHX-900 module is compact in its design, it delivers power and convenience and offers quality and dependability. The MHX-900 module's versatility makes it the ideal solution for applications ranging from office-productivity to industrial data control and acquisition.

While a pair of MHX-900 modules can link two terminal devices ("point-to-point" operation), multiple MHX-900 modules can be used together to create a network of various topologies ("point-to-multipoint" operation). Multiple independent networks can operate concurrently, so it is possible for unrelated communications operations to take place in the same or a nearby area without sacrificing privacy, functionality, or reliability.

1.1 Features

Key features of the MHX-900 module include:

- transmission within a public, license-exempt band of the radio spectrum[3] – this means there are no conditions on usage of the MHX-900 module, and that it can be used without restrictions or access fees (such as those incurred by cellular airtime);
- a serial I/O data port (TTL levels) with handshaking and hardware flow control, allowing the MHX-900 module to interface directly to any microprocessor with an asynchronous serial interface.

[1] Ideal conditions with clear line-of-sight communications, using high-gain antennas.
[2] Up to 115,200 bits per second (bps).
[3] 902-928 MHz, which is license-free within North America; may need to be factory-configured differently for some countries.

- twenty different user-selectable pseudo-random hopping patterns to offer the possibility of separately operating multiple networks while providing security, reliability and high tolerance to interference;
- encryption key with 65536 user-selectable values to maximize security and privacy of communications;
- built-in CRC-16 error detection and auto re-transmit to provide 100% accuracy and reliability of data;
- ease of installation and use – the MHX-900 module uses a subset of standard AT style commands making it compatible with most communication packages, such as HyperTerminal.

While the typical application for the MHX-900 is to provide a mid- to long-range wireless communications link between DTEs, it can be adapted to almost any situation where an asynchronous serial interface is used and data intercommunication is required.

1.2 About this Manual

This manual has been provided as a guide and reference for installing and using MHX-900 wireless modem modules. The manual contains instructions, suggestions, and information which will help you set up and achieve optimal performance from your equipment using the MHX-900 module.

It is assumed that users of the MHX-900 module have either system integration or system design experience. Chapter 2 details the requirements and connections of the MHX-900 module. Chapter 3 describes the AT command register setup and configuration. The Appendices, including the Glossary of Terms, are provided as informational references which you may find useful throughout the use of this manual as well as during the operation of the wireless modem.

Throughout the manual, you will encounter not only illustrations that further elaborate on the accompanying text, but also several symbols which you should be attentive to:

Caution or Warning: Usually advises against some action which could result in undesired or detrimental consequences.

Point to Remember: Highlights a key feature, point, or step which is worth noting, Keeping these in mind will make using the MHX-900 more useful or easier to use.

Tip: An idea or suggestion is provided to improve efficiency or to make something more useful.

With that in mind, enjoy extending the boundaries of your communications with the MHX-900 module.

2. Initial Setup and Configuration

2.0 Unpacking and Inspection

The following items should be found in the shipping carton. Inspect the contents for any shipping damage. Report damages or shortages to the distributor from which the unit was purchased. Keep all packing materials in the event that transportation is required in the future.

Package contents (normal distribution):

1	MHX-900 Wireless Modem module	1
2	Operating Manual (this document)	1

2.1 Additional Requirements

Since the MHX-900 module is a unique product in a class of its own, it will communicate only with another MHX-900 module which has been compatibly configured. Thus, at least two MHX-900 modules will be required to establish a wireless communications link.

Additionally, the following requirements should be taken into consideration when preparing to incorporate the MHX-900 module in new or existing designs.

- Relatively small footprint for the MHX-900 module (*e.g.*, 2.1" W x 3.5" L x 0.8" H) on the OEM PCB.
- Serial port and control signals from the host microprocessor. See sample application schematics in Appendix C.
- +5 Vdc supply from the host OEM electronics (± 10%).
- An external antenna (customer supplied).

2.2 Connectors and Indicators

The MHX-900 module connects to the host equipment by a dual row header on the underside of the unit. This enables the MHX-900 module to be directly soldered onto the host equipment manufacturer's PCB.

The MHX-900 radio deck is attached via a 40 pin header soldered directly to the PCB. The radio deck also has an antenna connector. A suitable antenna must be used to ensure adequate performance of the MHX-900 module.

The MHX-900 module is equipped with status LEDs which show the current operating mode for the unit. The LED signals also are also brought out to external connectors to be monitored by the OEM microprocessor.

The output drive capability of any output signal pin is approx. 5 mA.

The pin description and location of the MHX-900 is shown on the following page.

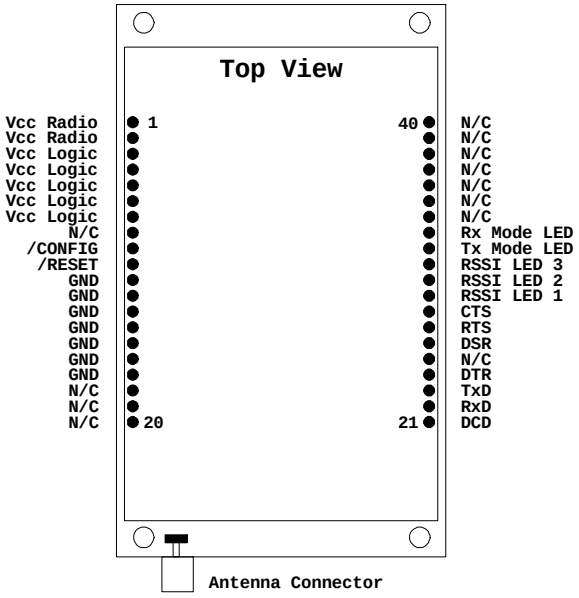

For maximum power, use separate power supplies for the radio and the digital electronics.

For OEM design simplicity, connect both the radio and logic VCC connections together. This saves a regulated power supply.

The interface connectors and indicator lights are summarized below:

Vcc Radio - These connections supply power for the MHX-900 module's radio deck electronics. For 1 watt maximum output, the required supply rating should be 5.25 VDC +- 5%. Limiting this to 5.0 Vdc will limit the output power slightly. Required current depends on transmit duration and output power. Maximum current at full transmit power is 600 mA DC.

Vcc Logic - These connections supply power for the MHX-900 module's digital electronics. To simplify the OEM design, the Radio VCC can be connected to the Logic VCC. Maximum current while transmitting is approx. 100 mA DC.

GND - These are the Ground supply connections for the digital and radio electronics.

/RESET - This momentary active low input signal (100 ms typical) resets the digital electronics.

/CONFIG - Leave this pin unconnected. Do NOT ground.

Receive Signal Strength Indicator (RSSI) LEDs - These outputs show the quality/strength of the received signal. As the signal strength increases, the number of active outputs increase incrementally.

Data Port (DCE) - Pins 21 through 28 inclusive. This port is used to interface the MHX-900 module to a DTE device and operates at 2400 to 115,200 bps. The same port is used to configure the modem by interfacing to the host microprocessor. See Appendix B for details on the serial interface signals.

Caution: Using any other power supply which does not provide the proper voltage or current could damage the MHX-900 module.

RX Mode LED - This active low output indicates when the modem receives data over the wireless link, as well as during internal carrier search and synchronization operations.

TX Mode LED - This active low output indicates that the modem is transmitting data wirelessly. This light flashes during initial startup and carrier synchronization.

Antenna Connector - The antenna is attached to this connection.

N/C - These pins are reserved for future use. Do not connect to this pins.

2.3 Configuration

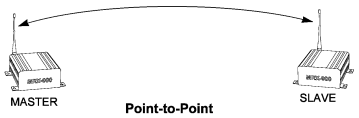

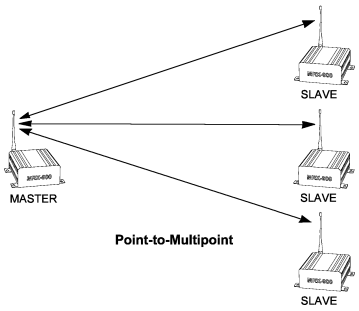

Prior to establishing a wireless link, each MHX-900 module that will participate in the link must be correctly configured for compatibility and for the desired mode of operation.

The two most common types of networks used are:

- **Point-to-point**: A *Master* station communicates with a single *Slave* station.
- **Point-to-multipoint**: A *Master* station communications with two or more *Slave* stations.

Within any network, the Master will communicate only with Slave(s) assigned to the same network. Similarly, a Slave will only communicate with the Master of the network to which it is assigned.

2.3.1 Quick Start Approach

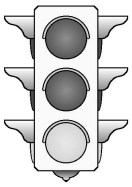

The minimum configuration requirements for point-to-point and point-to-multipoint are summarized below. *These requirements will get you started and only ensure that a link can be established, but do not necessarily provide the best performance*; optimization of the communications link is discussed in later sections.

A. Point-to-Point

To establish a point-to-point communications link, the following requisites must be satisfied:

- The **Operating Mode** for one modem must be configured as a "**Master - Point-to-Point**", and the other as a " **Slave - Point-to-Point**".
- The **Wireless Link Rate** for both modems must be the same.
- The **Network Address** assigned for both modems must be the same.
- The **Unit Address** assigned for both modems must be the same.
- The same **Hopping Pattern** must be selected for both modems.
- The same **Hopping Interval** must be selected for both modems.
- Both modems must use the same **Encryption Key**.

B. Point-to-Multipoint

To establish a point-to-multipoint network, the following requisites must be satisfied:

- The **Operating Mode** for one modem must be configured as a **Point-to-Multipoint Master**, and the others as **Point-to-Multipoint Slave**s.
- The **Wireless Link Rate** for all modems must be the same.
- The **Network Address** assigned to all modems must be the same.
- Each Slave must be assigned a unique **Unit Address** (Unit Address 0 is not supported).
- The same **Hopping Pattern** must be selected for all modems.
- The **Hopping Interval** is determined by the Master modem, and is therefore configured only at the Master.
- All modems must use the same **Encryption Key**.

Each of the parameters above are defined by specific S registers. Settings are not immediately stored in non-volatile memory. The command &W writes the current configuration into non-volatile memory, and are therefore retained even after powering down. Each item and the settable parameters within the modem configuration are described in detail in Chapter 3: Configuration Options.

2.4 Checking the Link

Once configured properly, a pair or set of communicating modems can be tested to ensure that a link can be successfully established. Connect an appropriate antenna to each MHX-900 module. The modems should indicate the status of the wireless link via the RSSI outputs on each unit:

If the link is good, up to three RSSI outputs should be active; and if the link is absent (due to a fault at one end or another, such as misconfiguration), the outputs will be inactive.

Warning: Using an antenna that is inappropriate for use with the MHX-900 module could result in undesired performance, and may damage the unit. It is the user's responsibility to ensure the antenna has adequate lightning protection.

It is recommended that if MHX-900 modules will be deployed in a field where large distances separate the units, the modems should be configured and tested in close proximity (*e.g.*, in the same room) first to ensure a good link can be established and settings are correct. This will facilitate troubleshooting, should problems arise. In a multipoint system, only the Slave modems give valid RSSI readings.

Microhard Systems Inc. provides a development system which supplies all system power and RS-232 level shifting circuits required to connect a MHX-900 module to a PC. This can serve as an invaluable aid in OEM system design.

3. Configuration Options

3.0 Command Line Interface

The MHX-900 modem module is easily configured to meet a wide range of needs and applications. You can have your modem perform a variety of functions by sending it instructions (in the form of commands). Sending a command overrides the modem's operating characteristics.

Your modem must be in Command Mode for it to execute a command. If you send characters when the modem is in Data Mode, the modem sends the characters across the Wireless Link.

When the modem is initially powered up, the interface will operate in command mode.

You can place the modem into Data Mode either by

1. Dialing a remote modem
2. Issuing the answer command
3. Issuing the online command

You can place the modem into Command Mode either by

1. Sending the escape sequence
2. Toggling the DTR line,

Note: When the connection is lost to the remote modem, the modem will switch to command mode.

To enter a command line and have your modem execute it, use the following procedure:

Refer to Appendix A (page 19) for a summary of the modem commands

Configuration options are not stored in non-volatile memory until the WRITE command (&W) is executed

1. With your modem in the Command Mode, type AT. These characters, known as the attention characters, must be typed at the beginning or each command line.

2. Type the command(s) in upper-case letters. Include any parameters required by the command. To make the command line more readable, you can insert as many spaces as desired. The command line holds up to 40 characters, not including the AT prefix.

3. Press the ENTER key. Your modem executes the command line and sends you a word response (usually OK).

For example, to set the Operating Mode S101 register to Master point to point mode, enter the following command line; AT S101 = 1 <return>.

To display what a register is currently set to, enter the following command line; AT Sxxx? <return>. The modem will output the value of the register.

Note: If you want to send more than one command line, wait for a response before entering the AT prefix at the start of the next command line.

To re-execute the previous command, enter A/. The modem will execute the previous command line.

For the AT command protocol, an escape sequence consists of three consecutive escape codes preceded and followed by at least 1 second of inactivity. Typically, the '+' character is used as the escape code.

+++ preceded and followed by 1 second of inactivity

3.1 AT Commands

Several AT Commands are supported by the MHX-900 module. The following is a short description of all available commands. '*' denotes standard factory settings.

A Answer

The A command causes the modem to attempt to connect with another remote modem.

D Dial

Using the D command, the modem will set itself for master point to point mode, and then try to synchronize with the modem address specified in the command (Dxxxx). Register S105 is overwritten with value xxxx. Note - DT or DP are also value (tone dial or pulse dial).

E Command Echo

Your modem is preset to return (or echo) commands to the host microprocessor when in Command Mode.

E0	No Command Echo
***E1**	Command Echo

I Identification

The I command returns various modem information settings.

I0	Product Code (MHX-900)
I1	3 Digit computed checksum
I2	Issue ROM Check (OK or ERROR)
I3	Product Identification (Firmware Version)
I4	Not Supported
I5	Firmware Copyright

O On-line Mode

The O command attempts to communicate with a remote modem.

Q Quiet Mode

Your modem is preset to send responses when it executes commands, and there after to keep the host informed of its status.

***Q0**	Enable modem responses
Q1	Disable modem responses

V Result Codes display

Your modem can either display result codes as words or numbers.

V0	Display Result Codes as numbers
***V1**	Display Result Codes as words

W Connection Result

The W command returns your modem to the Data Mode from the Command Mode

***W0**	Reports computer (DTE) rate as CONNECT xxxx
W1	Reports computer (DTE) rate and wireless rate between modems as CARRIER xxxx.
W2	Reports modem (DCE) rate as CONNECT xxxx

Z Reset and load stored configuration

The Z command resets the modem and loads the stored configuration.

&C DCD (Data Carrier Detect)

The &C command controls the modems DCD output signal to the host microprocessor. This command determines when the DCD is active.

&C0	DCD is always ON
***&C1**	DCD on when modems are synchronized

&D DTR (Data Terminal Ready)

The &D command controls what action the modem performs when the DTR input line is toggled. The DTR input is controlled by the host microprocessor.

&D0	DTR line is ignored
&D1	Not Supported
***&D2**	DTR disconnects and switches to Command Mode
&D3	DTR disconnects and resets modem

&F Load Factory Default Configuration

The &F command resets the modem and loads the default factory configuration.

&K Handshaking

The &K command controls the handshaking between the modem and host microprocessor.

&K0	Disable handshaking
***&K3**	Enable hardware handshaking (RTS/CTS)

&S DSR (Data Set Ready)

The &S command controls the DSR line for the modem, and determines when it is active

&S0	DSR is always ON
***&S1**	DSR is ON in Data Mode, OFF in Command Mode

&V View Configuration

The &V command displays the current (DTE) baud rate, and all setable modem parameters including S register values.

&W Write Configuration to memory

The &W command stores the active configuration into the modem's non-volatile memory.

Sxxx? Read S register value

This command causes the modem to display the current setting of S register xxx.

Sxxx=yyy Set S register value (see section on S-Registers)

This command sets the specified S register to a value specified by yyy.

3.2 Command Result Codes

The MHX-900 module can either display the results of a command as either text strings or numerical data. The following chart shows resulting text string and corresponding numeric result.

0	OK
1	CONNECT
2	RING
3	NO CARRIER
4	ERROR
8	NO ANSWER
10	CONNECT 2400
11	CONNECT 4800
12	CONNECT 9600
14	CONNECT 19200
17	CONNECT 38400
18	CONNECT 57600
33	CONNECT 115200

3.3 S Registers

S Register 0 - Number of Rings - Auto Answer

If this register is set to zero, the modem will power up in command mode. If this register is non-zero, the modem will power up in data mode.

S Register 2 - Escape Code

This register contains the ASCII value of the escape character.

The default value (decimal 43) is equivalent to the ASCII character '+'. Values greater than 127 disable the escape feature and prevent you from returning to the Command Mode.

Default is '+' (decimal 43).

S Register 3 - CR Control Code

This register contains the ASCII value of the carriage return character.

This is the character that is used to end the command line and is also the character that appears after the modem sends a response.

Default is 'CR' (decimal 13).

S Register 4 - Linefeed Control Code

Register S4 sets the ASCII value of the linefeed character.

The modem sends the linefeed character after sending a carriage return character when sending text responses.

Default is 'LF' (decimal 10).

S Register 5 - Backspace Control Code

Register S5 sets the ASCII value of the backspace character.

This character is both the character created by entering BACKSPACE and the character echoed to move the cursor to the left.

Default is 'BS' (decimal 8).

S Register 101 - Operating Mode

The Operating Mode (register S101) partly defines the "personality" of the MHX-900 module. Allowable settings for this register are 1 through 4.

Default is 2 (Slave point to point).

Each unit must be either a Master or Slave.

Each unit should be configured as a Master or Slave. The user should decide, prior to deployment, whether a point-to-point or point-to-multipoint network is appropriate for the application, and how each unit will be assigned to terminals.

Only one Master can exist for each network.

`1)Master - Point to Point` One unit in a point-to-point link should be set as the Master, obligating the other modem to be used as a Slave. During operation, it makes little difference which end is which, especially if data is generally transmitted unidirectionally at any given moment. When both terminals have data to send, more bandwidth is dynamically allocated to the Master; otherwise, the transmitting end, whichever it is at the time, is given the full bandwidth.

`* 2)Slave - Point to Point` The terminal in a point-to-point network which is not set as the Master, is obligated to be the Slave. The Slave will communicate with the Master, whose network address, unit address, hopping pattern and hopping interval matches its own.

In point-to-point operation, the Slave modem acknowledges all packets of data sent by the Master, and vice versa. These acknowledgements, along with CRC error checking ensure that data is passed through exactly once, and that the data is not corrupted.

`3)Master - Point to Multipoint` In a point-to-multipoint network, one unit should be set as the Master, obligating all other modems to be Slaves. The Master designation is generally given to the station which functions as a hub for all remote nodes, and it is the Master station's responsibility to control communications with Slaves.

Point-to-multipoint operation differs from point-to-point operation in many ways. One key difference is that the Slaves cannot acknowledge packets of data sent by the Master. Clearly this would cause conflicts when there are multiple Slaves. The Master does, however, send acknowledgements to all messages it receives from Slaves. The Master initiates communications by sending a broadcast message to all Slaves. All Slaves are free to respond in a "Slotted ALOHA" fashion, meaning that each Slave can choose one of several windows in which to transmit. If there happens to be two Slaves attempting to talk at the same time, then the Master would not receive the data, and the Slaves therefore would not get an acknowledgement. At this point, the Slaves would attempt to get the information through at random time intervals, thus attempting to avoid any more conflicts. Special parameters related to Point-to-Multipoint operation are set in the Packet Parameters menu, and are described in a later section.

`4) Slave - Point to Multipoint` Several Slaves exist in a point-to-multipoint network, all of which communicate with the common Master. Slaves cannot directly communicate with other Slaves.

S Register 102 - Serial Baud Rate

The Serial Baud Rate is the current speed that the modem is using to communicate with the DTE. When the AT command prefix is issued, the modem performs an 'autobaud' operation and determines what the current DTE baud rate is set to. The S register value returns the current setting of the DTE baud rate.

The possible values are:

1	115200
2	57600
3	38400
4	28800
5	19200
6	14400
***7**	**9600**
8	7200
9	4800
10	3600
11	2400

It is generally advisable to choose the highest rate that your terminal equipment will handle to maximize performance, unless a limitation on the available bandwidth is desired. If the DTE is a personal computer, the port can usually be used reliably at 115200.

S Register 103 - Wireless Link Rate

All units in a network must be set to the same wireless link rate.

The Wireless Link Rate is the speed and optimization method for which modems will communicate over the RF link.

The allowable settings are:

*** 1**	**Turbo**
2	Fast
3	Normal

Depending on the application requirements, each mode will provide different throughputs and performance optimizations as follows:

Mode	Expected Performance (Maximum Throughput)	Primary Optimization
Turbo	96 kbps	Optimized for Speed
Fast	60 kbps	Optimized for Distance and Speed
Normal	30 kbps	Optimized for Distance

Generally, the lowest rate which provides sufficient bandwidth should be selected. For example, if DTEs are set to communicate at 19.2 kbps, then the wireless rate can be set to Normal (with the added advantage of slightly greater range). If DTEs require nearly 115.2 kbps of sustained bandwidth, then the wireless rate should be set to Turbo (setting it lower would "bottleneck" data transmissions in the wireless link). Note that there is a compromise between speed, performance and range.

S Register 104 - Network Address

Select a Network Address and assign it to all units which will be included in the network.

The Network Address defines the membership to which individual units can be a part of. By establishing a network under a common Network Address, the network can be isolated from any other concurrently operating network using the same hardware. As well, the Network Address provides a measure of privacy and security. Only those units which are members of the network will participate in the communications interchange. Valid values for the Network Address range from 0 to 65535, inclusive.

To enhance privacy and reliability of communications where multiple networks may operate concurrently in close proximity, it is suggested that an atypical value be chosen – perhaps something meaningful yet not easily selected by chance or coincidence.

Default is 0.

S Register 105 - Unit Address

Use the same Unit Address on both units for point-to-point mode. In multipoint mode, set all Slaves to a unique Unit Address.

In Point-to-Point, valid Unit Addresses are 0 to 65535. In Point-to-Multipoint, valid Slave Unit Addresses are 1 to 65535.

In point-to-point operation, the Unit Address on both the Master and Slave units must be the same. In point-to-point operation, valid Unit Addresses range from 0 to 65535. In a multipoint system, the Unit Address uniquely identifies each Slave from the others.. In a multipoint system, a Slave can take on any Unit Address between 1 and 65535.

Remember that each Slave should have a Unit Address which is unique from any other Slave in the network.

Default is 1.

S Register 106 - Hopping Pattern

Ensure that all units within a network use the same hopping pattern, and that multiple concurrent networks each have different hopping patterns.

Since the MHX-900 is a frequency-hopping modem, the carrier frequency changes periodically according to one of twenty pseudo-random patterns, selected by defining the Hopping Pattern.

A value from 1 to 20, inclusive, can be used to select the pattern. It is important that all units which will participate in a network use the same hopping pattern, or the communication link will fail.

Default is 1.

S Register 107 - Encryption Key

All units within a network must use the same encryption key.

The Encryption Key provides a measure of security and privacy of communications by rendering the transmitted data useless without the correct key on the receiver. Valid Encryption Keys range from 0 to 65535.

Keep in mind that all units within the network must use the same key for communications to succeed.

S Register 108 - Output Power Level

The Output Power Level determines at what power the MHX-900 transmits. The super-sensitive MHX-900 can operate with very low power levels, so it is recommended that the lowest power necessary is used; using excessive power contributes to unnecessary "RF pollution".

The allowable settings are:

*** 1**	**1 mW**
2	10 mW
3	100 mW
4	1000 mW

Ideally, you should test the communications performance between units starting from a low power level and working upward until the RSSI is sufficiently high and a reliable link is established. Although the conditions will vary widely between applications, typical uses for each setting are described below:

Test the communications link using a low power level and work upward. Avoid using a higher power than necessary since performance may actually degrade.

Power	Use
1 mW	For in-building use, typically provides a link up to 300 feet on the same floor or up/down a level. Outdoors, distances of 10 km can be achieved if high-gain (directional) antennas are placed high above ground level and are in direct line-of-sight.
10 mW	200-500 ft indoors, 8-15 km outdoors.
100 mW	400-800 ft indoors, 15-25 km outdoors.
1000 mW (1 W)	Typically provides communications up to a distance of 1000 feet or more in-building on the same floor or up/down a few levels, depending on building construction (wood, concrete, steel, etc.). In ideal line-of-sight conditions, up to 30 km or more can be achieved. Note that only an antenna with a gain of no more 6 dBi may be used. Any higher is a violation of FCC rules. See IMPORTANT warning below.

IMPORTANT:

FCC and Industry Canada Regulations allow up to 36 dBi effective radiated power (ERP). Therefore, the sum of the transmitted power (in dBm), the cabling loss and the antenna gain cannot exceed 36 dBi.

1 mW = 0 dBm

10 mW = 10 dBm

100 mW = 20 dBm

1000 mW = 30 dBm

For example, when transmitting 1 Watt (30 dBm), with cabling losses of 2 dB, the antenna gain cannot exceed 36 - 30 + 2 = 8 dBi. If an antenna with a gain higher than 8 dBi were to be used, the power setting must be adjusted appropriately.

Violation of FCC or IC regulations can result in severe fines. It is the responsibility of the user to understand and ensure compliance with these regulations.

S Register 109 - Hopping Interval

In a point-to-point network, the master and slave must be set to the same hopping interval.

This option determines the frequency at which the modems change channel. Note that all modems must have the same hopping interval setting.

The allowable settings are:

1	25 msec
2	50 msec
3	100 msec
4	150 msec
***5**	**200 msec**
6	250 msec
7	300 msec
8	350 msec

In a point-to-multipoint network, the hopping interval is controlled by the master. The slave units will use the hopping interval setting from the master.

In Slave - Point-to-Multipoint operation, this parameter is determined by the Master, and cannot be altered.

Packet Parameters

Packet Parameters define the characteristics of the internal packets or frames which are transmitted. The settings should be set only by an expert since adequate care must be taken to maintain reliability and optimum performance. Packet Parameters will vary depending on the modem's Operating Mode.

S Registers 111 to 113 - Packet Parameters -Point to Point Mode

In Point-to-Point (both Master and Slave), the following settings are available:

S Register 111 - Minimum Size

This setting has a range of 0 to 255, and defines the number of bytes to accumulate from the DTE before transmitting a packet. Setting this value to 0 ensures that all characters sent by the DTE are immediately transmitted. The value may not exceed the maximum packet size.

S Register 112 - Maximum Size

This setting has a range of 1 to 255, and defines the maximum number of bytes from the DTE which should be encapsulated in a packet. This value should be greater than the minimum packet size, but not smaller than is necessary for reliable communications. If the wireless link is consistently good and solid, a maximum size of 255 will yield the best throughput (depending on the higher level protocols of the connected equipment). However, if the link is poor (*e.g.*, experiencing excessive interference) and data is frequently retransmitted, the maximum packet size should be reduced. This decreases the probability of errors within packets, and reduces the amount of traffic in the event that retransmissions are required. Since a smaller packet size results in a proportionally higher overhead and lower overall throughput on a good connection, this should only be reduced if many errors are being detected by CRC (see Radio Statistics option of configuration).

S Register 113 - Retry Limit

This setting has a range of 0 to 255, and determines the number of attempts that will be made to retransmit data which failed the CRC checksum. Once the limit is reached, the modem will give up and discard the data. If the wireless connection is poor and data often needs to be retransmitted, a modem could be "tied up" trying to retransmit, thus holding up pending data.

S Registers 111 to 115 - Packet Parameters - Point-to-Multipoint Mode

If the Operating Mode is Slave - Point-to-Multipoint, the default values for the S registers are:

S111 Minimum Size	(not used)
S112 Maximum Size	(not used)
S113 Retry Limit	4
S115 Repeat Interval	8

In Master - Point-to-Multipoint mode, the default values for the S registers are:

S111 Minimum Size	0
S112 Maximum Size	255
S113 Retransmissions	255
S114 Address Header	Disabled

S Register 111 - Minimum Size

The **Minimum Size** parameter prevents the Slave from sending data until it has buffered a minimum number of bytes. The Master determines this parameter and passes the information to all Slaves in a Multipoint system.

S Register 112 - Maximum Size

Packet sizes in excess of the minimum size are limited by the **Maximum Size** parameter. If the Slave is sending more than the minimum, the unit will wait until it has buffered the maximum packet size or until a packet timeout of two characters occurs on the serial port. The Master unit tells all Slaves which maximum and minimum packet values to use. In addition, the Master tells all Slaves which Hopping Interval to use (see Section 3.11).

S Register 113 - Retry Limit (Slave Point to Multipoint)

Similar to the Retry Limit in Point-to-Point, the Slaves in a multipoint system will reattempt to send a packet of data until it receives an acknowledge or until it reaches the Retry Limit.

S Register 113 - Retransmissions (Master Point to Multipoint)

In a multipoint system, the Master does not receive acknowledgments from Slaves, and therefore has a slightly modified parameter called Retransmissions. The Master will retransmit each data packet exactly the number of times defined by the Retransmissions parameter. The Master retransmits once per hopping interval until the limit is reached.

S Register 114 - Address Header

A packet parameter unique to Master - Point-to-Multipoint is the **Address Header** parameter. The allowable settings are:

***1**	**Disabled**
2	Binary
3	Text

When the Master receives a packet from a Slave, it has the option of attaching an address header at the beginning of each packet.

Option 2 will attach two bytes of binary data that represent the Slave Unit Address. The first byte is MSB.

Option 3 will attach five bytes of data that represent the text version of the Slave Unit Address. The Maximum Packet Size includes the Address Header. For example, if the Maximum Packet Size is set to 128 and the Text Address Header option is selected, then the Master will tell the Slave to send a maximum of 123 bytes.

No address header is attached when Option 1) is used. In this case, it is up to the equipment connected to the Slave to attach an address header of some sort so that the Master equipment can determine the source of the data transmission.

S Register 115 - Packet Repeat Interval

A parameter that is specific to the Slave in multipoint operation is the **Repeat Interval**.

The allowable settings are:

1	1...1
2	1...3
3	1...7
4	1...15
5	1...31
6	1...63
7	1...127
***8**	**1...255**

This parameter defines a range of random numbers that the Slave will use as the next slot in which it will attempt to send the packet. For example, if Option 3 (1...7) is selected, and the random number generator picks 5, then the Slave will transmit after five time slots. A Slave will transmit a maximum of once per hopping interval. The Slave will transmit more frequently when a Repeat Interval with a smaller range is selected. Choose 1) for the most frequent repeats and choose 8) for the least frequent repeats.

A. Modem Command Summary

The following provides a command summary for the MHX-900 module. Factory settings are denoted with a '*'.

AT Commands

A	Answer
D	Dial
E	Command Echo
	E0 No Echo
	* E1 Command Echo
I	Identification
	I0 Product Code
	I1 Checksum
	I2 ROM Checksum
	I3 Product ID
	I4 Not Supported
	I5 Firmware Version
O	On-line Mode
Q	Quiet Mode
	* Q0 Enables Result Codes
	Q1 Disables Result Codes
V	Result Codes Display
	V0 Display as Numbers
	* V1 Display as Words
W	Connection Result
	* W0 Reports DTE as CONNECT xxxx
	W1 Reports computer (DTE) rate and wireless rate between modems as CARRIER xxxx.
	W2 Reports DCE as CONNECT xxxx
Z	Reset and load stored configuration
&C	DCD (Data Carrier Detect)
	&C0 DCD is always on
	* &C1 DCD is on when modems are synchronized
&D	DTR (Data Terminal Ready)
	&D0 DTR ignored
	* &D2 DTR disconnects and switches to command
	&D3 DTR disconnects and resets modem
&F	Load Factory Default
&K	Handshaking
	&K0 Disable Handshaking
	* &K3 Enable Handshaking
&S	DSR (Data Set Ready)
	&S0 DSR is always on
	* &S1 DSR on in data, off in command mode
&V	View Configuration
&W	Write configuration to memory
Sxx?	Read S register value
Sxx=yy	Set S register value

Result Codes

0	OK
1	CONNECT
2	RING
3	NO CARRIER
4	ERROR
8	NO ANSWER
10	CONNECT 2400
11	CONNECT 4800
12	CONNECT 9600
14	CONNECT 19200
17	CONNECT 38400
18	CONNECT 57600
33	CONNECT 115200

S Registers

S0	Number of Rings - Auto Answer [0...255]
S2	Escape code [0...255] default '+'
S3	CR character [0...255] default <cr>
S4	Line Feed [0...255] default <lf>
S5	Backspace [0...255] default <bs>
S101	Operating Mode
	1 - Master point to point
	* 2 - Slave point to point
	3 - Master point to multipoint
	4 - Slave point to multipoint
S102	Serial Baud Rate
	1 = 115200, 2 = 57600, 3 = 38400
	4 = 28800, 5 = 19200, 6 = 14400
	* 7 = 9600, 8 = 7200, 9 = 4800,
	10 = 3600, 11 = 2400
S103	Wireless Link Rate
	*1 = Turbo, 2 = Fast, 3 = Normal
S104	Network Address [0...65535]
S105	Unit Address [0...65535]
S106	Hopping Pattern [1...20]
S107	Encryption Key [0...65535]
S108	Output Power Level
	* 0 = 1 mW, 1 = 10 mW, 2 = 100 mW
	3 = 1000 mW
S109	Hopping Interval
	1 = 25 msec, 2 = 50 msec, 3 = 100 msec,
	4 = 150 msec, * 5 = 200 msec, 6 = 250 msec,
	7 = 300 msec, 8 = 350 msec
S111	Packet Minimum Size [0...Maximum Size]
S112	Packet Maximum Size [1...255]
S113	Packet Retry Transmissions [0...255]
S114	Address Header
	* 0 = Disabled, 1 = Binary, 2 = Text
S115	Packet Repeat Interval
	1 = 1...1, 2 = 1...3, 3 = 1...7, 4 = 1...15
	5 = 1...31, 6 = 1...63, 7 = 1...127, * 8 = 1...255

B. Serial Interface

The MHX-900 module uses 8 pins on the 40 pin connector for asynchronous serial I/O. The interface conforms to TTL level RS-232 signals (ie. without level shifting), so direct connection to a host microprocessor is possible.

The signals in the asynchronous serial interface are described below:

DCD *Data Carrier Detect* - **Output from Modem** - When asserted (TTL low), DCD informs the DTE that a communications link has been established with another MHX-900.

RX *Receive Data* - **Output from Modem** - Signals transferred from the MHX-900 are received by the DTE via RX.

TX *Transmit Data* - **Input to Modem** - Signals are transmitted from the DTE via TX to the MHX-900.

DTR *Data Terminal Ready* - **Input to Modem** - Asserted (TTL low) by the DTE to inform the modem that it is alive and ready for communications.

SG *Signal Ground* - Provides a ground reference for all signals transmitted by both DTE and DCE.

DSR *Data Set Ready* - **Output from Modem** - Asserted (TTL low) by the DCE to inform the DTE that it is alive and ready for communications. DSR is the modem's equivalent of the DTR signal.

RTS *Request to Send* - **Input to Modem** - A "handshaking" signal which is asserted by the DTE (TTL low) when it is ready. When hardware handshaking is used, the RTS signal indicates to the DCE that the host can receive data.

CTS *Clear to Send* - **Output from Modem** - A "handshaking" signal which is asserted by the DCE (TTL low) when it has enabled communications and transmission from the DTE can commence. When hardware handshaking is used, the CTS signal indicates to the host that the DCE can receive data.

Notes: It is typical to refer to RX and TX from the perspective of the DTE. This should be kept in mind when looking at signals relative to the modem (DCE); the modem *transmits* data on the RX line, and *receives* on TX.

"DCE" and "modem" are often synonymous since a modem is typically a DCE device.

"DTE" is, in most applications, a device such as a host microprocessor.

Modem **(DCE)**	Signal		Host Microprocessor **(DTE)**
21 ———	DCD	——→	IN
22 ———	RX	——→	IN
23 ←———	TX	———	OUT
24 ←———	DTR	———	OUT
17 ———	SG	———	
26 ———	DSR	——→	IN
27 ←———	RTS	———	OUT
28 ———	CTS	——→	IN

Arrows denote the direction that signals are asserted (*e.g.*, DCD originates at the DCE and tells the DTE that a carrier is present).

C. Sample Schematic Diagram

The following is a sample microprocessor implementation with a MICROCHIP PIC 16C74 and the MHX-900. The MHX-900 performs no level shifting on the serial port, so direct connection to the host microprocessor is possible.

DO NOT CONNECT THE MHX-900 TO RS 232 DRIVER OUTPUTS. DAMAGE TO THE UNIT MAY RESULT.

On this implementation, the onboard SCI of the PIC 16C74 is directly connected pins 22 and 23 of the MHX-900. The bi-directional Port D is used for asserting or monitoring control signals from the MHX-900.

The RESET signal is a momentary active low signal asserted by the host microprocessor.

RESET initializes the MHX-900 and places the system in a known state. This signal should be set high after the host microprocessor has been reset.

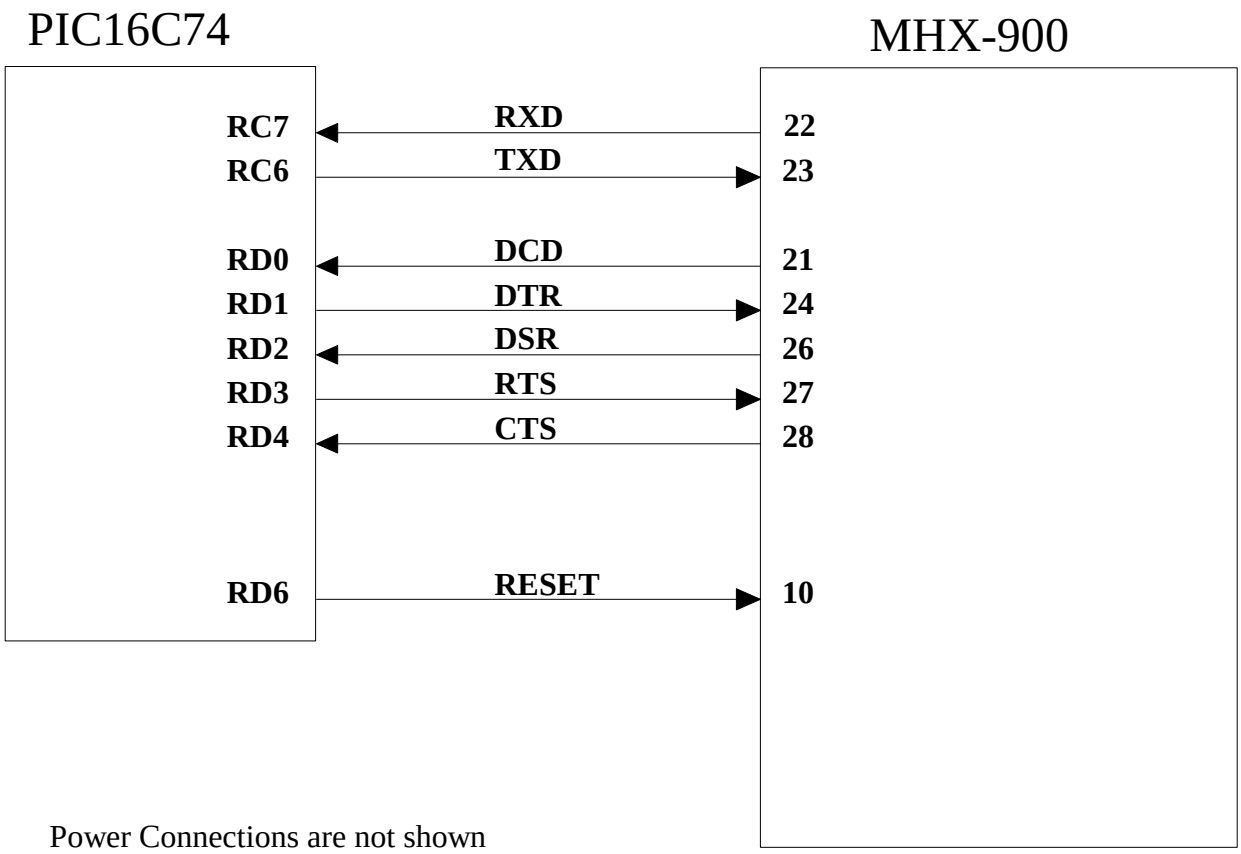

D. Modem Setup Overview

The required commands required to setup an MHX-900 module for point-to-point and point-to-multipoint are summarized below. *These requirements will get you started and only ensure that a link can be established, but do not necessarily provide the best performance.*

Point-to-Point

To establish a point-to-point communications link, the following commands must be issued by the host EOM microprocessor:

- The **Operating Mode S Register** (S101) for one modem must be configured as a "**Master - Point-to-Point**" (1), and the other as a " **Slave - Point-to-Point**" (2).
- The **Wireless Link Rate S Register** (S103) value for both modems must be the same.
- The **Network Address S Register** (S104) value assigned for both modems must be the same.
- The **Unit Address S Register** (S105) value assigned for both modems must be the same.
- The same **Hopping Pattern S Register** (S106) value must be selected for both modems.
- The same **Hopping Interval S Register** (S109) value must be selected for both modems.
- The same **Encryption Key S Register** (S107) value must be selected for both modems.

The master can now attempt to synchronize with the slave using the D<slave address> command.

Point-to-Multipoint

To establish a point-to-point communications link, the following commands must be issued by the host OEM microprocessor:

- The **Operating Mode S Register** (S101) for one modem must be configured as a "**Point-to-Multipoint Master** " (3), and the other as a "**Point-to-Multipoint Slave"** (4).
- The **Wireless Link Rate S Register** (S103) value for both modems must be the same.
- The **Network Address S Register** (S104) value assigned for both modems must be the same.
- Each Slave must be assigned an unique **Unit Address S Register** (S105) value (Unit Address 0 is not supported).
- The same **Hopping Pattern S Register** (S106) value must be selected for both modems.
- The same **Hopping Interval S Register** (S109) value must be selected for both modems.
- The same **Encryption Key S Register** (S107) value must be selected for both modems.

The master can now attempt to synchronize with the slave using the D<slave address> command.

E. Technical Specifications

Electrical/Physical

Data Interface	Asynchronous Serial Port, TTL Levels
RS-232 Signals	Sig. Gnd, TX, RX, DCD, DSR, DTR, RTS, CTS
Other Signals	Reset, RxMode, TxMode, RSSI1, RSSI2, RSSI3 (All except Reset are status signals)
User Interface	AT Command line interface
Bandwidth / Data Rate	2,400 - 115,200 bps, uncompressed half-duplex, Approx. 100 kbps sustained in intelligent asymmetrical full-duplex transmission mode
Communications Range	Up to 30 kilometres (19 miles) line of sight
Power Requirements	4.75 to 5.5 VDC
Power Consumption	5500 mA at 1 W transmit, 220 mA receive
Operating Frequency	902 - 928 MHz
System Gain	135 dB
Sensitivity	-105 dBm
Output Power	1mW, 10mW, 100mW, 1W (user-selectable)
Spreading Code	Frequency Hopping
Hopping Patterns	20 pseudo-random, user-selectable
Error Detection	CRC-16 with auto re-transmit
Dimensions (WxDxH)	Encl: 2.1” x 3.5” x 0.75” (53 mm x 89 mm x 19 mm)
Weight	75 grams
Operating Environment	Temperature: -40 to +65°C Humidity: 5 to 95%, non-condensing

F. Glossary

Terminology Used in the MHX-900 Operating Manual

Asynchronous communications A method of telecommunications in which units of single bytes of data are sent separately and at an arbitrary time (not periodically or referenced to a clock). Bytes are "padded" with start and stop bits to distinguish each as a unit for the receiving end, which need not be synchronized with the sending terminal.

Attenuation The loss of signal power through equipment, lines/cables, or other transmission devices. Measured in decibels (dB).

Bandwidth The information-carrying capacity of a data transmission medium or device, usually expressed in bits/second (bps).

Baud Unit of signaling speed equivalent to the number of discrete conditions or events per second. If each signal event represents only one bit condition, then baud rate equals bits per second (bps) – this is generally true of the serial data port, so *baud* and *bps* have been used interchangeably in this manual when referring to the serial port; this is not always the case during the DCE-to-DCE communications, where a number of modulation techniques are used to increase the bps rate over the baud rate.

Bit The smallest unit of information in a binary system, represented by either a 1 or 0. Abbreviated "b".

Bits per second (b/s or bps) A measure of data transmission rate in serial communications. Also see *baud*.

Byte A group of bits, generally 8 bits in length. A byte typically represents a character of data. Abbreviated "B".

Characters per second (cps) A measure of data transmission rate for common exchanges of data. A character is usually represented by 10 bits: an 8-bit byte plus two additional bits for marking the start and stop. Thus, in most cases (but not always), *cps* is related to *bits per second (bps)* by a 1:10 ratio.

CRC (Cyclic Redundancy Check) An error-detection scheme for transmitted data. Performed by using a polynomial algorithm on data, and appending a checksum to the end of the packet. At the receiving end, a similar algorithm is performed and checked against the transmitted checksum.

Crossover cable (Also known as rollover, null-modem, or modem-eliminator cable) A cable which allows direct DTE-to-DTE connection without intermediate DCEs typically used to bridge the two communicating devices. Can also be used to make cabled DCE-to-DCE connections. The name is derived from "crossing" or "rolling" several lines, including the TX and RX lines so that transmitted data from one DTE is received on the RX pin of the other DTE and vice-versa.

Data Communications Equipment (DCE, also referred to as Data Circuit-Terminating Equipment, Data Set) A device which facilitates a communications connection between *Data Terminal Equipment* (DTEs). Often, two or more compatible DCE devices are used to "bridge" DTEs which need to exchange data. A DCE performs signal encoding, decoding, and conversion of data sent/received by the DTE, and transmits/receives data with another DCE. Common example is a modem.

Data Terminal Equipment (DTE) An end-device which sends/receives data to/from a DCE, often providing a user-interface for information exchange. Common examples are computers, terminals, and printers.

dBm Stands for "Decibels referenced to one milliwatt (1 mW)". A standard unit of power level commonly used in RF and communications work. *n* dBm is equal to $10^{(n/10)}$ milliwatt, so 0dBm = 1mW, -10dBm = 0.1mW, -20dBm = 0.01mW, etc.

DCE See *Data Communications Equipment*.

DTE See *Data Terminal Equipment*.

Flow Control A method of moderating the transmission of data so that all devices within the communications link (DTEs and DCEs) transmit and receive only as much data as they can handle at once. This prevents devices from sending data which cannot be received at the other end due to conditions such as a full buffer or hardware not in a ready state. This is ideally handled by hardware using flow-control and handshaking signals, but

can be controlled also by software using X-ON/X-OFF (transmitter on/off) commands.

Frequency-hopping A type of *spread spectrum* communication whereby the carrier frequency used between transmitter and receiver changes repeatedly in a synchronized fashion according to a specified algorithm or table. This minimizes unauthorized jamming (interference) and interception of telecommunications.

Full-duplex Where data can be transmitted, simultaneously and independently, bi-directionally.

Half duplex Exists when the communications medium supports bi-directional transmission, but data can only travel in one direction at the same time.

Handshaking A flow-control procedure for establishing data communications whereby devices indicate that data is to be sent and await appropriate signals that allow them to proceed.

Line-of-sight Condition in which a transmitted signal can reach its destination by travelling a straight path, without being absorbed and/or bounced by objects in its path.

Master The station which controls and/or polls one or more Slave stations in a point-to-point or point-to-multipoint network. Often functions as a server or hub for the network.

Non-volatile memory Memory which retains information which is written to it.

Null modem cable See *Crossover cable*.

Point-to-point A simple communications network in which only two DTEs are participants.

Point-to-multipoint A communications network in which a *Master* DTE communicates with two or more *Slave* DTEs.

Repeater A device which automatically amplifies or restores signals to compensate for distortion and/or attenuation prior to retransmission. A repeater is typically used to extend the distance for which data can be reliably transmitted using a particular medium or communications device.

RS-232 (Recommended Standard 232; more accurately, RS-232C or EIA/TIA-232E) Defined by the EIA, a widely known standard electrical and physical interface for linking DCEs and DTEs for serial data communications. Traditionally specifies a 25-pin D-sub connector, although many newer devices use a compact 9-pin connector with only the essential signaling lines used in asynchronous serial communications. Lines have two possible states: “high” (on, active, asserted, carrying +3 to +25 V) or “low” (off, inactive, disasserted, carrying -3 to -25 V).

RTU (Remote Terminal Unit) A common term describing a DTE device which is part of a wide-area network. Often a RTU performs data I/O and transmits the data to a centralized station.

Serial communications A common mode of data transmission whereby character bits are sent sequentially, one at a time, using the same signaling line. Contrast with parallel communications where all bits of a byte are transmitted at once, usually requiring a signal line for each bit.

Shielded cable Interface medium which is internally shrouded by a protective sheath to minimize external electromagnetic interference (“noise”).

Slave A station which is controlled and/or polled by the Master station for communications. Typically represents one end of a point-to-point connection, or one of the terminal nodes in a point-to-multipoint network. Often a RTU is linked by a Slave DCE.

Spread spectrum A method of transmitting a signal over a wider bandwidth (using several frequencies) than the minimum necessary for the originally narrowband signal. A number of techniques are used to achieve spread spectrum telecommunications, including *frequency hopping*. Spread spectrum provides the possibility of sharing the same band amongst many users while increasing the tolerance to interference and noise, and enhancing privacy of communications.

Throughput A measure of the rate of data transmission passing through a data communication system, often expressed as bits or characters per second (bps or cps).